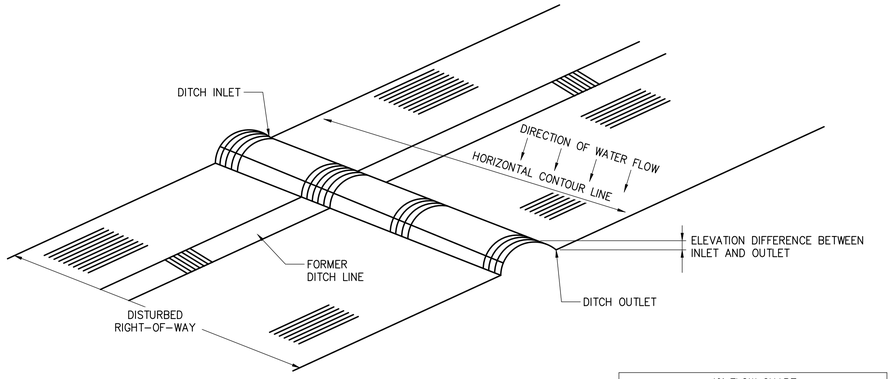

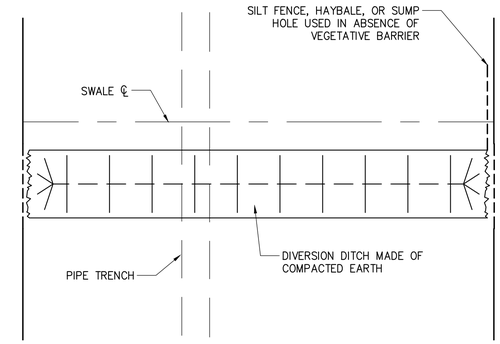

OVERHEAD VIEW

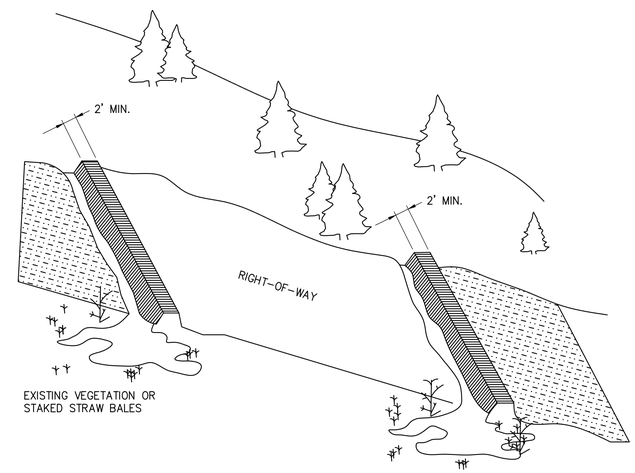

WATER SHALL BE DIVERTED OFF THE DISTURBED RIGHT-OF-WAY AT AN OUTSLOPE OF THREE TO FIVE PERCENT BY CONSTRUCTING DIVERSION DITCH ACCORDING TO THE FOLLOWING PROCEDURES:

1. AT THE PROPOSED INTERCEPTOR DITCH LOCATION ESTABLISH A HORIZONTAL CONTOUR LINE (USING A POCKET TRANSIT OR HAND LEVEL) WHICH EXTENDS COMPLETELY ACROSS THE DISTURBED RIGHT-OF-WAY. THIS LINE WILL ALWAYS BE PERPENDICULAR TO THE DIRECTION OF WATER FLOW AND SHOULD BE PARALLEL TO THE MAP CONTOURS SHOWN ON THE PLAN DRAWINGS.
2. DETERMINE WHICH SIDE OF THE RIGHT-OF-WAY IS BEST SUITED FOR THE DITCH OUTLET (EVALUATE VEGETATION DENSITY, LOCAL TOPOGRAPHY, ETC.) AND DEVIATE DIKE AWAY FROM THE HORIZONTAL CONTOUR LINE SLIGHTLY DOWNWARD TOWARD THE SELECTED OUTLET SIDE MAINTAINING A THREE TO FIVE PERCENT SLOPE. AS AN EXAMPLE, THE CHART AT THE RIGHT SHOWS DIMENSIONS ASSUMING A FOUR PERCENT SLOPE.
3. WHEN OUTLETTING NEAR WATER BODIES, STREAMS, DITCHES, & CROP FIELDS, A FILTER FENCE OR STRAW BALE FENCE SHOULD BE PLACED ON OUTLET END OF THE DIVERSION DITCH.

4% FLOW CHART	
HORIZONTAL DISTANCE BETWEEN WATERBAR INLET & OUTLET (FEET)	ELEVATION DISTANCE BETWEEN WATERBAR INLET AND OUTLET (FEET)
75	3
100	4
125	5
150	6
175	7

TEMPORARY DRAINAGE DITCH

NOTES:

1. TEMPORARY DIVERSION DITCH SHOULD BE BUILT SIMILAR TO THE PERMANENT DITCH CONFIGURATION BUT THE DIMENSION CAN BE SCALED BACK.
2. MAXIMUM HEIGHT SHOULD BE 12" AND SHOULD BE COMPACTED.
3. SPACING BETWEEN DIVERSION DITCHES AND SKEW OF THE DIVERSION DITCHES CAN VARY FROM THE PERMANENT DIVERSION DITCHES.
4. WHEN CONSTRUCTING TEMPORARY DIVERSION DITCHES THEY SHOULD BE FUNCTIONAL, WHILE MAINLINE CONSTRUCTION IS PROCEEDING, UNTIL RESTORATION BEGINS AND PERMANENT DIVERSION DITCHES ARE THEN CONSTRUCTED.

1 PERMANENT DIVERSION DITCH DETAIL

SCALE: N.T.S.

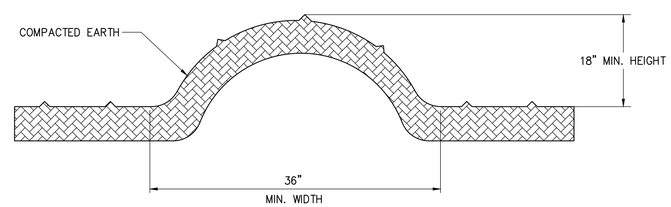

NOTES:

1. WATERBARS ARE NOT USED IN THIS PACKAGE/SEGMENT. DETAILS ARE PROVIDED SHOULD WATERBARS BE DEEMED NECESSARY BY THE ENVIRONMENTAL INSPECTOR BASED ON FIELD CONDITIONS.

2 MINIMAL HEIGHT & WIDTH DIMENSIONS FOR WATERBAR CONSTRUCTION

SCALE: N.T.S.

CHPE Champlain Hudson Power Express

Kiewit

Engineering and Land Surveying, P.C.

STATE OF NEW YORK · SEAN LENAHAN · 102293 · LICENSED PROFESSIONAL ENGINEER

IT IS A VIOLATION OF LAW FOR ANY PERSON, UNLESS THEY ARE ACTING UNDER THE DIRECTION OF A LICENSED PROFESSIONAL ENGINEER, ARCHITECT, LANDSCAPE ARCHITECT OR LAND SURVEYOR TO ALTER AN ITEM IN ANY WAY. IF AN ITEM BEARING THE STAMP OF A LICENSED PROFESSIONAL IS ALTERED, THE ALTERING ENGINEER, ARCHITECT, LANDSCAPE ARCHITECT OR LAND SURVEYOR SHALL STAMP THE DOCUMENT AND INCLUDE THE NOTATION "ALTERED BY" FOLLOWED BY THEIR SIGNATURE, THE DATE OF SUCH ALTERATION, AND A SPECIFIC DESCRIPTION OF THE ALTERATION.

No.	DATE	SUBMITTAL / REVISION DESCRIPTION	DB	APP
0	08/03/2023	ISSUED FOR CONSTRUCTION SUBMISSION	BL	SL

CHAMPLAIN HUDSON POWER EXPRESS
SEGMENT 6 (PACKAGE 4A) - CP: BALLSTON TO GLENVILLE
WATERBAR DETAILS

DRAWN BY: BL DESIGNED BY: BL APPROVED BY: SL SCALE AS SHOWN REV. NO.

KIEWIT PROJECT NO. 21162
KC PROJECT NO. 120174
DRAWING NO. **C-612**
DATE 08/03/2023
SH.NO. OF

File: P:\120174-CHPE_CABLE_INSTALL-KIEWIT\60_CAD\30_ENGINEERING_CAD_FILES\PACKAGE_4A\NY_ENVIRONMENTAL_(EROSION_CONTROL)\01_KCE\SHEET_FILES\21162_4A_ESC-DETAILS.DWG Saved: 7/21/2023 4:18:07 PM Plotted: 8/1/2023 3:52:59 PM Current User: Benson Lam LastSavedBy: jramirez

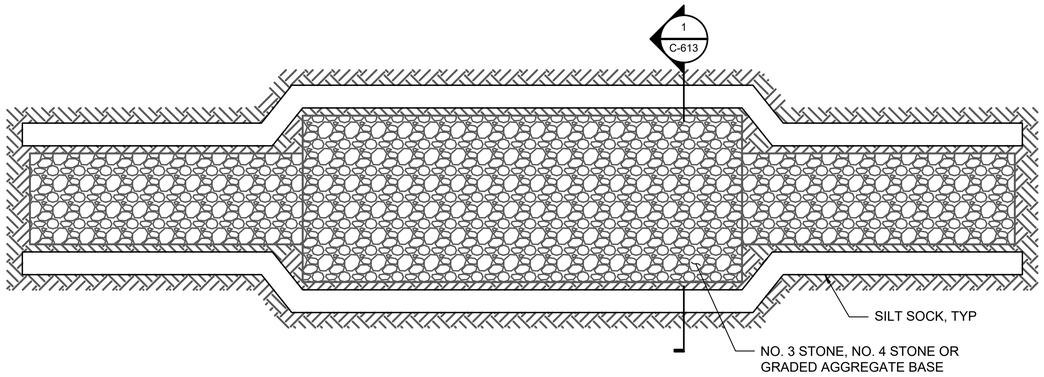

WETLAND AND AGRICULTURAL LANDS WORKING SURFACE PLAN - OPTION A

NOT TO SCALE

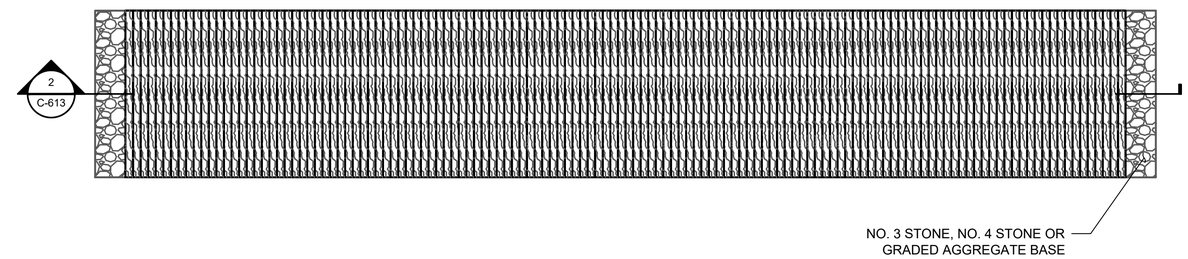

WETLAND AND AGRICULTURAL LANDS WORKING SURFACE PLAN - OPTION B

NOT TO SCALE

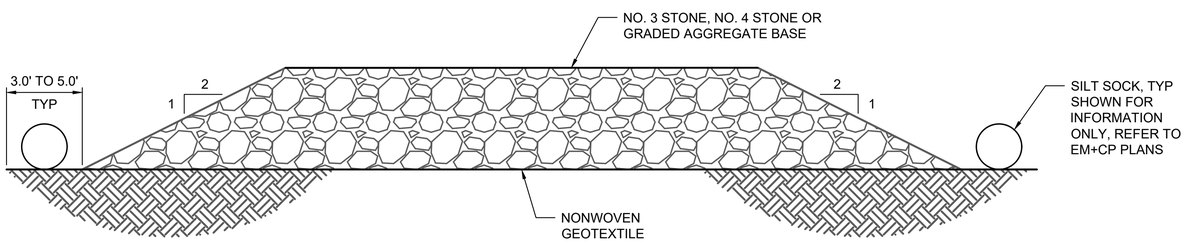

1 C-613 **SECTION**

NOT TO SCALE

NOTES:

1. UNDERCUT AND REMOVE TOP SOIL PRIOR TO PLACING GEOTEXTILE FABRIC.
2. A LAYER OF CLEAN CRUSHED STONE SHALL BE LAID ON TOP OF THE GEOTEXTILE FABRIC.
3. GEOTEXTILE FABRIC SHALL EXTEND AT LEAST 3 FT TO 5 FT BEYOND THE EDGE OF STONE PLACEMENT TO MINIMIZE STONE ENTERING THE WETLAND AND FACILITATE REMOVAL OF THE ROAD.
4. SUITABLE CROSS DRAINING SHALL BE PROVIDED ACROSS THE ROAD FOR STREAM CHANNELS AND SURFACE FLOW.
5. REFER TO EM+CP PLANS FOR EROSION CONTROL DETAILS.
6. REFER TO EM+CP PLANS FOR RESTORATION OF WETLAND.

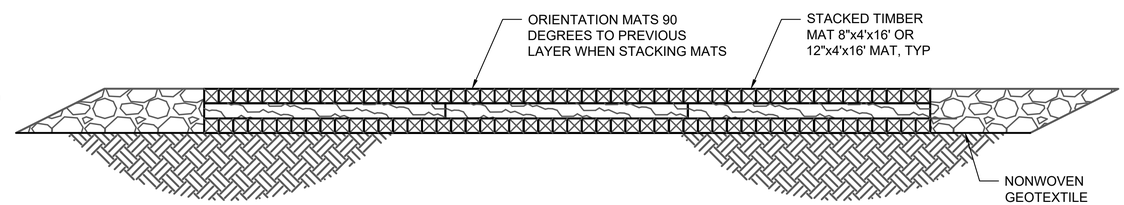

2 C-613 **SECTION**

NOT TO SCALE

NOTES:

1. TIMBER MATS SHOULD BE INSTALLED IN WETLANDS, AGRICULTURAL LANDS AND OTHER AREAS IF NECESSARY TO PREVENT RUTTING.
2. BASED ON ACTUAL SITE CONDITIONS, NUMBER OF TIMBER MAT LAYERS TO BE DETERMINED ON SITE.
3. TIMBER MAT SURFACE SHOULD BE LEVEL TO PREVENT EQUIPMENT AND VEHICLES FROM SLIDING OFF DURING MUDDY OR ICING CONDITIONS, AND PREVENT TIMBERS FROM BREAKING.
4. SEDIMENT TRACKED ONTO TIMBER MATTING SHOULD BE REMOVED AS NECESSARY TO PREVENT SEDIMENT FROM ENTERING WETLAND AND AGRICULTURAL LAND DURING RAIN EVENTS. SEDIMENT SHOULD BE REMOVED TO A STABILIZED SOIL STOCKPILE OR OTHER APPROVED LOCATION.
5. PERIMETER EROSION AND SEDIMENT CONTROLS ARE REQUIRED TO BE INSTALLED PRIOR TO PLACING TIMBER MATTING.
6. UNLESS PERMITTED FROM REMOVAL, STUMPS WITHIN THE WETLAND SHOULD REMAIN. THIS MAY REQUIRE ADDITIONAL TIMBERS TO BRIDGE ABOVE.
7. UPON REMOVAL OF TIMBER MATTING ALL SPLINTERED WOOD SHOULD BE REMOVED. IF EXPOSED SOILS ARE PRESENT STRAW MULCH SHOULD BE APPLIED.
8. REFER TO EM+CP PLANS FOR EROSION CONTROL DETAILS.
9. REFER TO EM+CP PLANS FOR RESTORATION OF WETLAND.

GENERAL NOTES:

1. TIMBER:
   A. TIMBER SHALL BE SELECT STRUCTURAL MIXED OAK WITH A MINIMUM BENDING STRESS OF 1250 PSI OR BETTER.
2. CONTRACTOR TO VERIFY ALL DIMENSIONS AND SITE CONDITIONS PRIOR TO COMMENCING WORK. ANY ERRORS, OMISSIONS, OR UNUSUAL CONDITIONS ARE TO BE REPORTED TO THE ENGINEER IMMEDIATELY.
3. NONWOVEN GEOTEXTILE SHALL BE MIRAFI 180N OR EQUIVALENT APPROVED BY EOR.

CHPE Champlain Hudson Power Express

Kiewit

Engineering and Land Surveying, P.C.

STATE OF NEW YORK · LULING YANG · 101896-1 · LICENSED PROFESSIONAL ENGINEER

Luling.Yang Digitally signed by Luling.Yang DN: cn=Luling.Yang, o=Engineering Analytics, OU=Users, ou=Above, DC=KIEWITCORP, DC=Kiewit Date: 2023.07.25 15:25:56-04'00'

IT IS A VIOLATION OF LAW FOR ANY PERSON, UNLESS THEY ARE ACTING UNDER THE DIRECTION OF A LICENSED PROFESSIONAL ENGINEER, ARCHITECT, LANDSCAPE ARCHITECT OR LAND SURVEYOR TO ALTER AN ITEM IN ANY WAY. IF AN ITEM BEARING THE STAMP OF A LICENSED PROFESSIONAL IS ALTERED, THE ALTERING ENGINEER, ARCHITECT, LANDSCAPE ARCHITECT OR LAND SURVEYOR SHALL STAMP THE DOCUMENT AND INCLUDE THE NOTATION "ALTERED BY" FOLLOWED BY THEIR SIGNATURE, THE DATE OF SUCH ALTERATION, AND A SPECIFIC DESCRIPTION OF THE ALTERATION.

No.	DATE	SUBMITTAL / REVISION DESCRIPTION	DB	APP
0	07/28/2023	ISSUED FOR CONSTRUCTION SUBMISSION	BL	SL

CHAMPLAIN HUDSON POWER EXPRESS
SEGMENT 6 (PACKAGE 4A) - CP: BALLSTON TO GLENVILLE
WETLAND AND AGRICULTURAL LAND WORKING SURFACE

DRAWN BY: BL | DESIGNED BY: BL | APPROVED BY: SL | SCALE: AS NOTED | REV. NO. 0

KIEWIT PROJECT NO. 21162
KC PROJECT NO. 120174
DRAWING NO. **C-613**
DATE 07/26/2023
SH.NO. OF

File: P:\120174-CHPE_CABLE_INSTALL-KIEWIT\60_CAD\20_ENGINEERING_CAD_FILES\PACKAGE_4B\NY_ENVIRONMENTAL_(EROSION_CONTROL)\01_ACCE\SHEET_FILES\21162_4B-ESC-DETAILS.DWG Saved: 7/25/2023 11:39:50 AM Plotted: 7/25/2023 2:53:35 PM Current User: Jose Ramirez LastSavedBy: blam

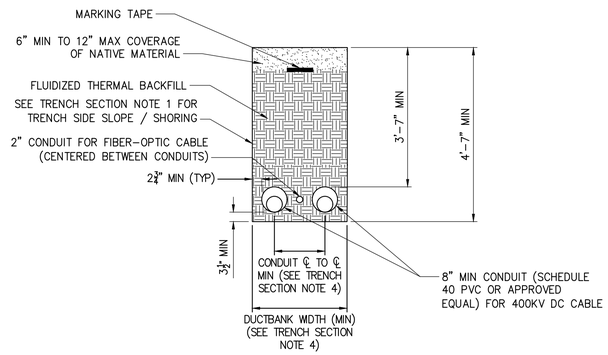

1A TRENCH SECTION – TYPICAL
NOT TO SCALE

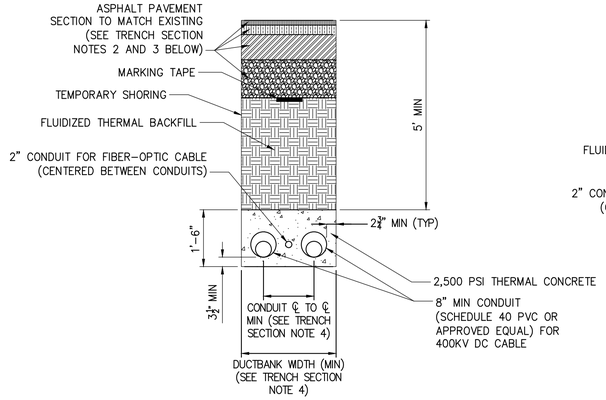

2A TRENCH SECTION – ROADWAY
NOT TO SCALE

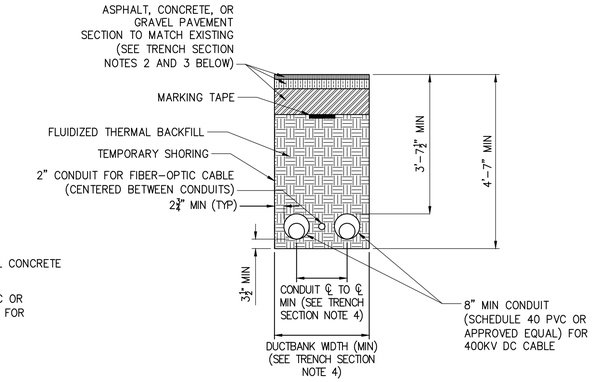

3A TRENCH SECTION – PAVEMENT
NOT TO SCALE

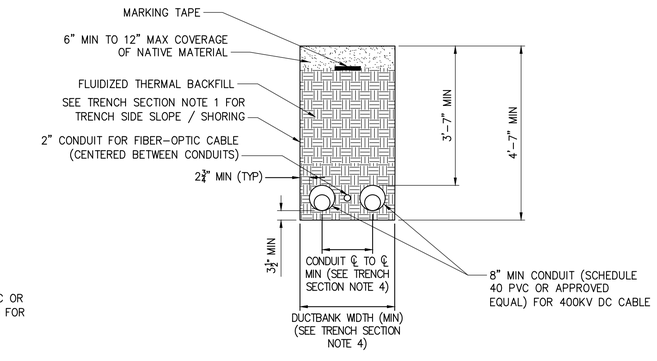

4A TRENCH SECTION – AG LANDS
NOT TO SCALE

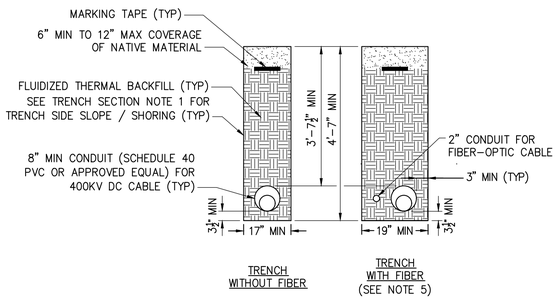

1B SPLIT TRENCH SECTION – TYPICAL
NOT TO SCALE

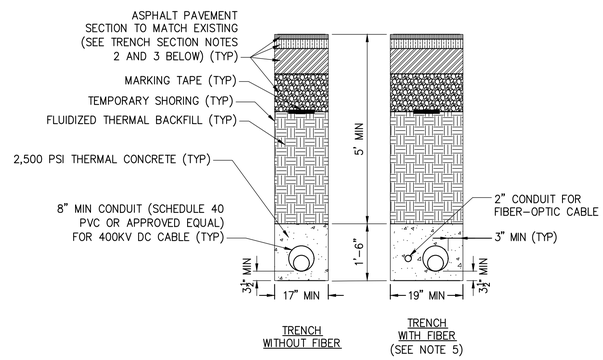

2B SPLIT TRENCH SECTION – ROADWAY
NOT TO SCALE

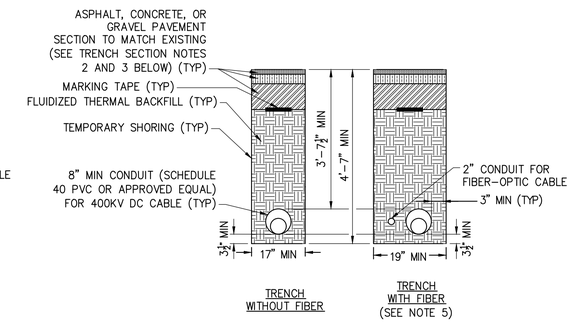

3B SPLIT TRENCH SECTION – PAVEMENT
NOT TO SCALE

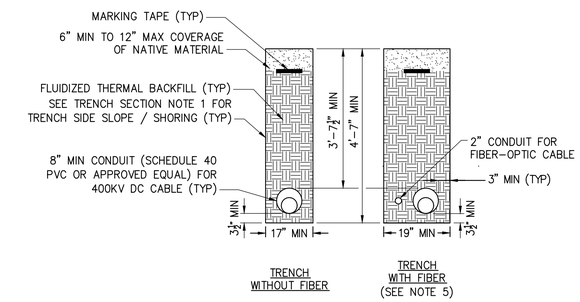

4B SPLIT TRENCH SECTION – AG LANDS
NOT TO SCALE

TRENCH SECTION NOTES:
1. SLOPING, BENCHING, OR SHORING SHALL BE IN ACCORDANCE WITH OSHA EXCAVATION STANDARDS, 29 CFR PART 1926, SUBPART P. AT LOCATIONS WHERE THE TRENCH IS NOT SHORED, SLOPING AND/OR BENCHING WILL DEPEND ON TYPE OF SOILS ENCOUNTERED ON SITE. SLOPE FROM EDGE OF ROADWAY TO BOTTOM OF EXCAVATIONS MAY BE FLATTER THAN 2:1 (H:V) FOR AASHTO HS-20 LOADING. THE CONTRACTOR SHALL BE RESPONSIBLE FOR EVALUATING SLOPE STABILITY BASED ON ACTUAL EQUIPMENT FOR SITE OPERATIONS AS DETERMINED BY A GEOTECHNICAL ENGINEER.
2. SEE DETAIL 4 ON DETAIL SHEET C-631 FOR PAVEMENT TRANSITION DETAIL.
3. SEE SHEET C-631 FOR SURFACE RESTORATION DETAILS.
4. SEE PLAN AND PROFILE SHEETS FOR CONDUIT ℄ TO ℄ AND DUCTBANK WIDTH (NOTE ABOVE PROFILE VIEW).
5. FIBER TO LEAD IN AND OUT OF (–) POLARITY HDD BORE, AS DENOTED ON PLAN AND PROFILE SHEETS.

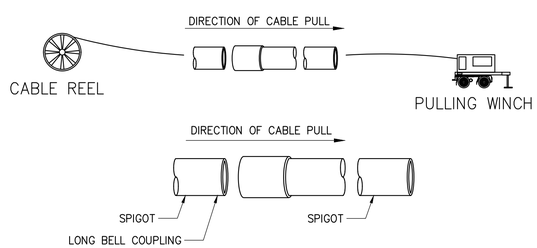

5 TYPICAL COUPLING DIRECTION OF PULL DETAIL
NOT TO SCALE

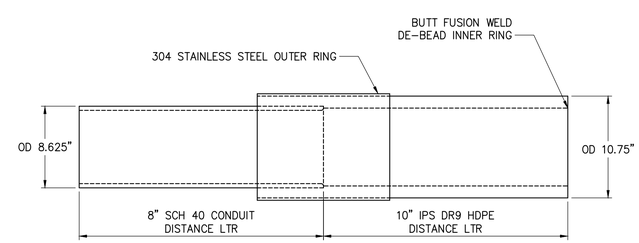

6 8"–10" PVC/HDPE TRANSITION COUPLING DETAIL
NOT TO SCALE

NOTE:
THIS TRANSITION COUPLING COMES ASSEMBLED AS A UNIT. POLY-CAM, ISCO INDUSTRIES P/N: 737-1008PVC40PVI09 TRANSITION COUPLING SHALL ARRIVE FROM VENDOR WITH NO ROUGH EDGES OR PROTRUSIONS ON INTERIOR. INTEGRITY OF COUPLING TO BE FIELD-VERIFIED PRIOR TO INSTALLATION. IF UNSATISFACTORY, CONTRACTOR TO SHAPE OR SAND MINOR IRREGULARITIES PRIOR TO INSTALLATION.

CHPE Champlain Hudson Power Express

Kiewit

Engineering and Land Surveying, P.C.

KC ENGINEERING AND LAND SURVEYING, P.C.
STATE OF NEW YORK · SIRIGUAL J. BARVLITA · 105202 · LICENSED PROFESSIONAL ENGINEER

IT IS A VIOLATION OF LAW FOR ANY PERSON, UNLESS THEY ARE ACTING UNDER THE DIRECTION OF A LICENSED PROFESSIONAL ENGINEER, ARCHITECT, LANDSCAPE ARCHITECT OR LAND SURVEYOR TO ALTER AN ITEM IN ANY WAY. IF AN ITEM BEARING THE STAMP OF A LICENSED PROFESSIONAL IS ALTERED, THE ALTERING ENGINEER, ARCHITECT, LANDSCAPE ARCHITECT OR LAND SURVEYOR SHALL STAMP THE DOCUMENT AND INCLUDE THE NOTATION "ALTERED BY" FOLLOWED BY THEIR SIGNATURE, THE DATE OF SUCH ALTERATION, AND A SPECIFIC DESCRIPTION OF THE ALTERATION.

No.	DATE	SUBMITTAL / REVISION DESCRIPTION	DB	APP
0	08/03/2023	ISSUED FOR CONSTRUCTION SUBMISSION	JM	SB

CHAMPLAIN HUDSON POWER EXPRESS
SEGMENT 6 (PACKAGE 4A) - CP: BALLSTON TO GLENVILLE
TRENCHING DETAILS

KIEWIT PROJECT NO. 21162
KC PROJECT NO. 120174
DRAWING NO. **C-621**

DRAWN BY: AJ | DESIGNED BY: JM | APPROVED BY: SB | SCALE AS NOTED | REV. NO. 0 | DATE 08/03/2023 | SH.NO. -- OF --

File: P:\120174-CHPE_CABLE_INSTALL-KIEWIT\60_CAD\20_ENGINEERING_CAD_FILES\PACKAGE_4A\NY_ENVIRONMENTAL_(EROSION_CONTROL)\01_ACE\SHEET_FILES\21162_4A_C-621.DWG Saved: 7/24/2023 8:35:15 AM Plotted: 7/29/2023 2:42:55 PM Current User: Jennefer Montalaza LastSavedBy: jmontalaza

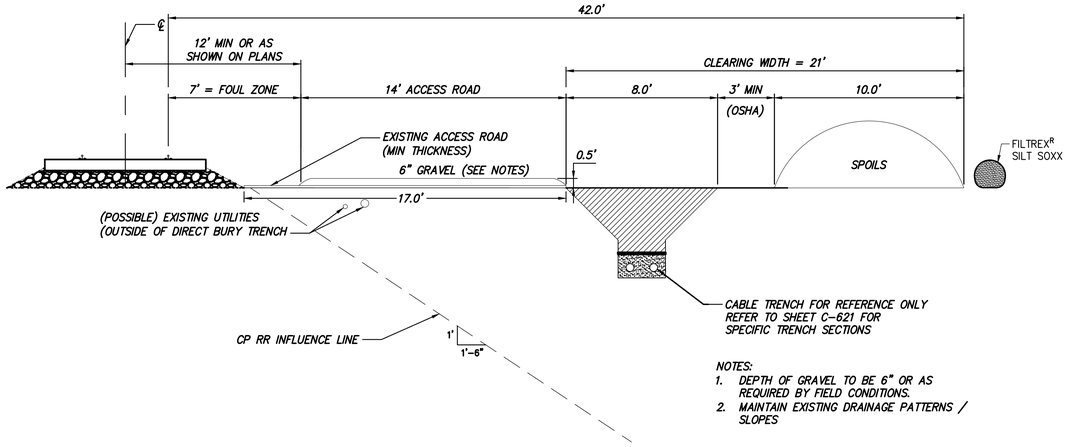

NOTES:
1. DEPTH OF GRAVEL TO BE 6" OR AS REQUIRED BY FIELD CONDITIONS.
2. MAINTAIN EXISTING DRAINAGE PATTERNS / SLOPES

TYPE 1
EXISTING, MINOR REFURBISHMENT

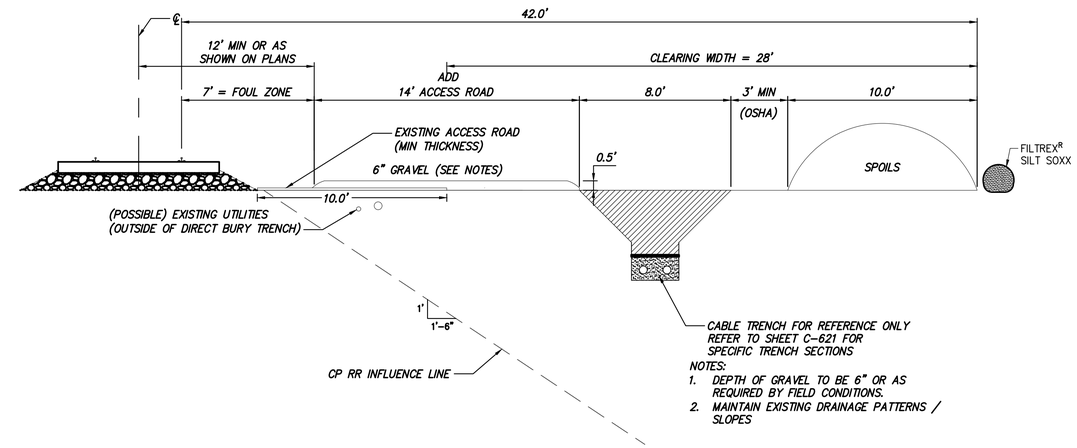

NOTES:
1. DEPTH OF GRAVEL TO BE 6" OR AS REQUIRED BY FIELD CONDITIONS.
2. MAINTAIN EXISTING DRAINAGE PATTERNS / SLOPES

TYPE 2
EXISTING, MAJOR REFURBISHMENT

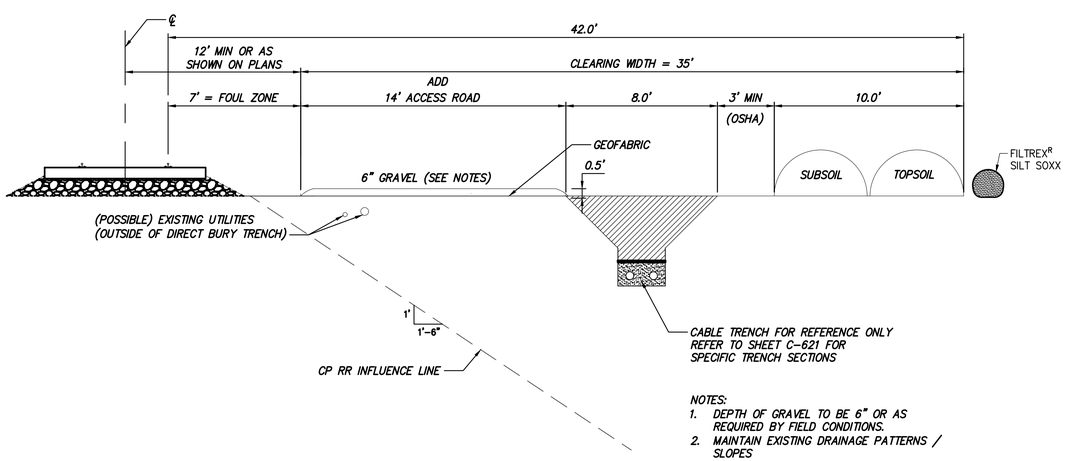

NOTES:
1. DEPTH OF GRAVEL TO BE 6" OR AS REQUIRED BY FIELD CONDITIONS.
2. MAINTAIN EXISTING DRAINAGE PATTERNS / SLOPES

TYPE 3
BUILD NEW

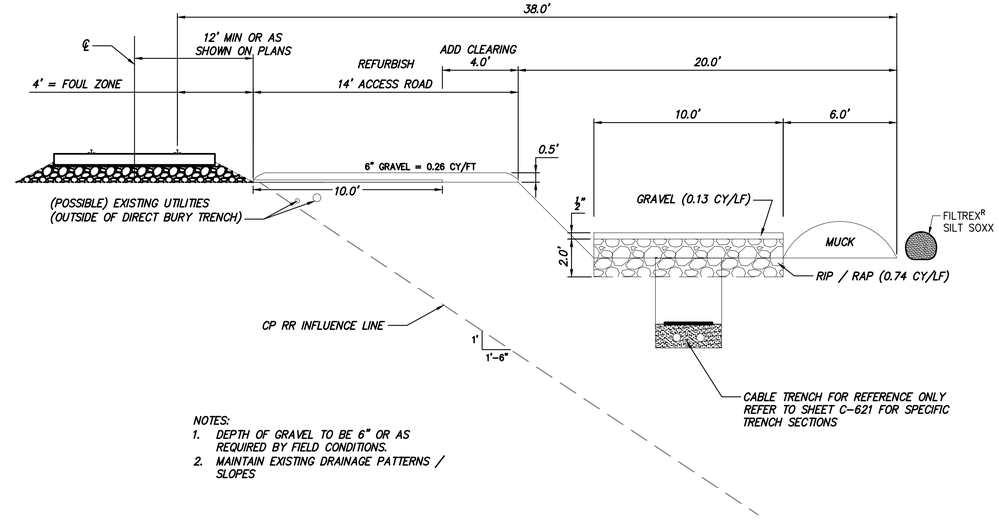

NOTES:
1. DEPTH OF GRAVEL TO BE 6" OR AS REQUIRED BY FIELD CONDITIONS.
2. MAINTAIN EXISTING DRAINAGE PATTERNS / SLOPES

TYPE 4A
WETLAND

CHPE Champlain Hudson Power Express

Kiewit

Engineering and Land Surveying, P.C.

KC ENGINEERING AND LAND SURVEYING, P.C.
STATE OF NEW YORK · SHMUEL J. BARYALIY · 105202 · LICENSED PROFESSIONAL ENGINEER

IT IS A VIOLATION OF LAW FOR ANY PERSON, UNLESS THEY ARE ACTING UNDER THE DIRECTION OF A LICENSED PROFESSIONAL ENGINEER, ARCHITECT, LANDSCAPE ARCHITECT OR LAND SURVEYOR TO ALTER AN ITEM IN ANY WAY. IF AN ITEM BEARING THE STAMP OF A LICENSED PROFESSIONAL IS ALTERED, THE ALTERING ENGINEER, ARCHITECT, LANDSCAPE ARCHITECT OR LAND SURVEYOR SHALL STAMP THE DOCUMENT AND INCLUDE THE NOTATION "ALTERED BY" FOLLOWED BY THEIR SIGNATURE, THE DATE OF SUCH ALTERATION, AND A SPECIFIC DESCRIPTION OF THE ALTERATION.

No.	DATE	SUBMITTAL / REVISION DESCRIPTION	DB	APP
0	08/03/2023	ISSUED FOR CONSTRUCTION SUBMISSION	JM	SB

CHAMPLAIN HUDSON POWER EXPRESS
SEGMENT 6 (PACKAGE 4A) - CP: BALLSTON TO GLENVILLE
TYPICAL ACCESS ROAD CROSS SECTIONS

KIEWIT PROJECT NO. 21162
KC PROJECT NO. 120174
DRAWING NO. **C-622**

DRAWN BY: CS | DESIGNED BY: JM | APPROVED BY: SB | SCALE AS NOTED | REV. NO. 0 | DATE 08/03/2023 | SH.NO. -- OF --

File: P:\20174-CHPE_CABLE_INSTALL-KIEWIT\60_CAD\20_ENGINEERING_CAD_FILES\PACKAGE_4A\NY_HIGHWAY_DESIGN\01_KCE\SHEET_FILES\21162_4A_C-622.DWG Saved: 4/28/2023 10:00:25 AM Plotted: 7/29/2023 2:43:03 PM Current User: Jennefer Montalvo LastSavedBy: cstevens

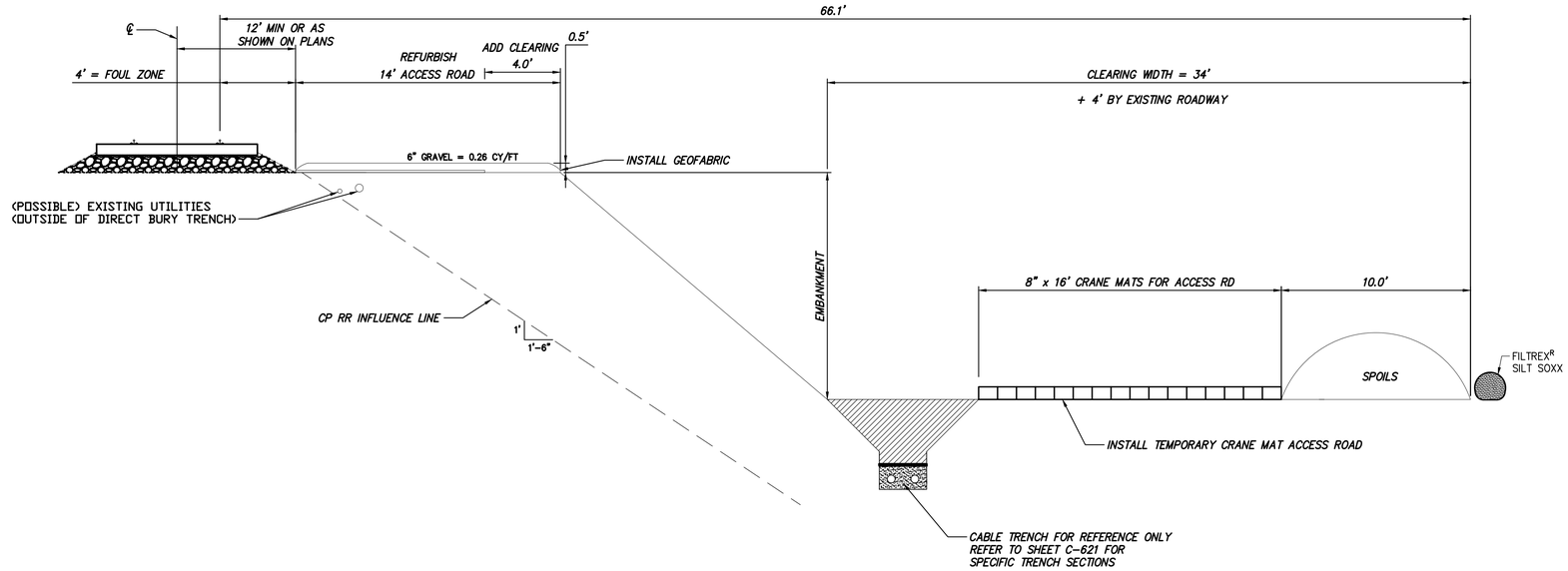

TYPE 4

REFURBISH ACCESS NEXT TO RAIL. BUILD TEMP ACCESS AT TOE OF SLOPE

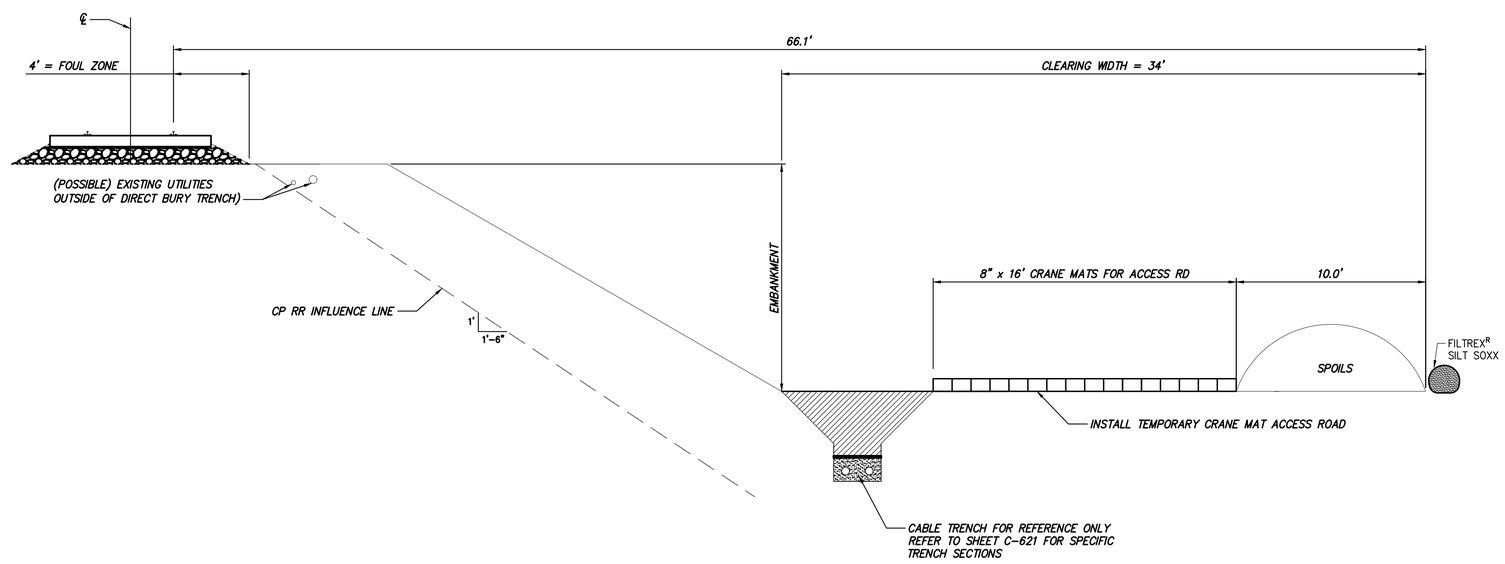

TYPE 5

BUILD TEMP ACCESS AT TOE OF SLOPE

CHPE Champlain Hudson Power Express

Kiewit

Engineering and Land Surveying, P.C.

KC ENGINEERING AND LAND SURVEYING, P.C. — STATE OF NEW YORK — SINGIAL J. BARYALI — 105202 — LICENSED PROFESSIONAL ENGINEER

IT IS A VIOLATION OF LAW FOR ANY PERSON, UNLESS THEY ARE ACTING UNDER THE DIRECTION OF A LICENSED PROFESSIONAL ENGINEER, ARCHITECT, LANDSCAPE ARCHITECT OR LAND SURVEYOR TO ALTER AN ITEM IN ANY WAY. IF AN ITEM BEARING THE STAMP OF A LICENSED PROFESSIONAL IS ALTERED, THE ALTERING ENGINEER, ARCHITECT, LANDSCAPE ARCHITECT OR LAND SURVEYOR SHALL STAMP THE DOCUMENT AND INCLUDE THE NOTATION "ALTERED BY" FOLLOWED BY THEIR SIGNATURE, THE DATE OF SUCH ALTERATION, AND A SPECIFIC DESCRIPTION OF THE ALTERATION.

No.	DATE	SUBMITTAL / REVISION DESCRIPTION	DB	APP
0	08/03/2023	ISSUED FOR CONSTRUCTION SUBMISSION	JM	SB

CHAMPLAIN HUDSON POWER EXPRESS
SEGMENT 6 (PACKAGE 4A) - CP: BALLSTON TO GLENVILLE
TYPICAL ACCESS ROAD CROSS SECTIONS

DRAWN BY: CS | DESIGNED BY: JM | APPROVED BY: SB | SCALE AS NOTED | REV. NO. 0

KIEWIT PROJECT NO. 21162
KC PROJECT NO. 120174
DRAWING NO. **C-623**
DATE 08/03/2023
SH.NO. -- OF --

File: P:\20174-CHPE_CABLE_INSTALL-KIEWIT\60_CAD\20_ENGINEERING_CAD_FILES\PACKAGE_4A\MY_HIGHWAY_DESIGN\01_KCE\SHEET_FILES\21162_4A_C-622.DWG Saved: 4/28/2023 10:00:25 AM Plotted: 7/29/2023 2:43:08 PM Current User: Jennefer Montalvo LastSavedBy: cstevens

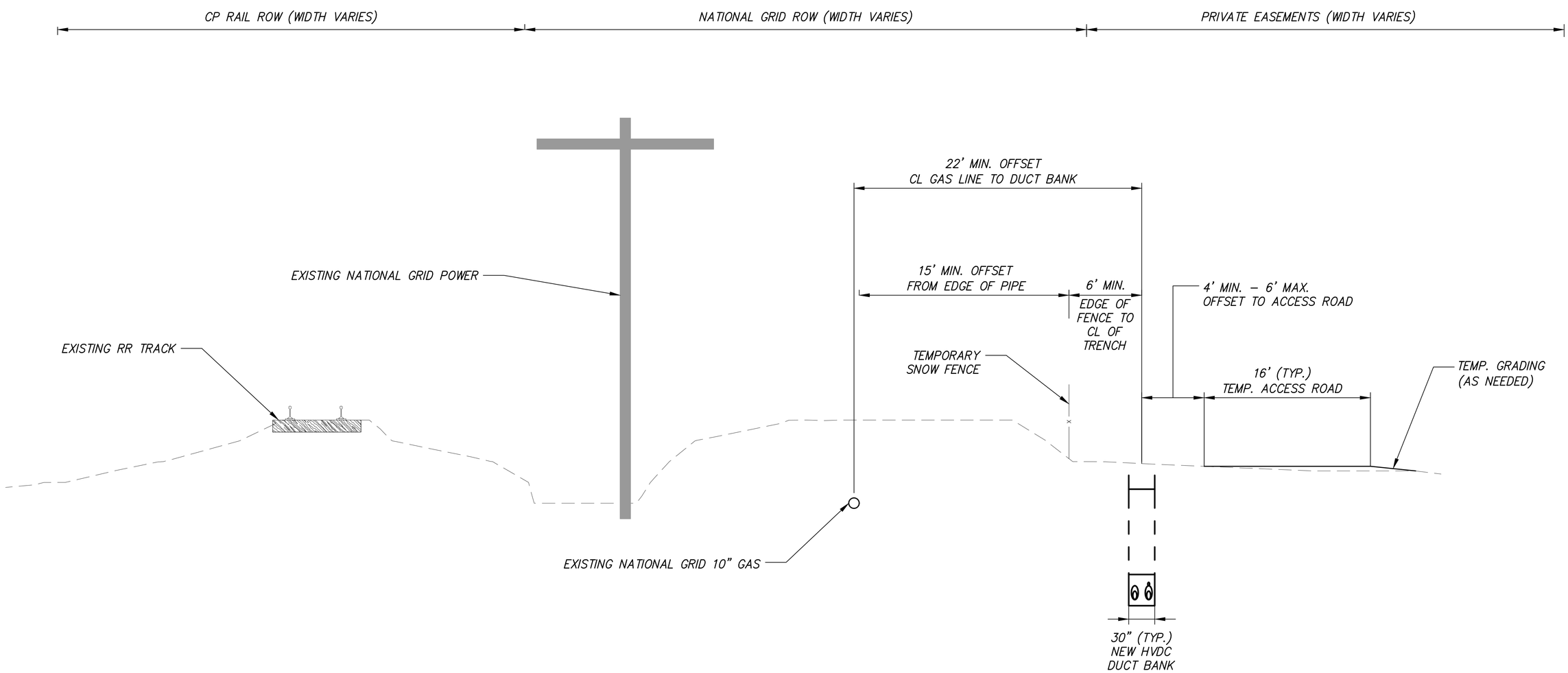

CHPE Champlain Hudson Power Express

Kiewit

Engineering and Land Surveying, P.C.

KC ENGINEERING AND LAND SURVEYING, P.C.
STATE OF NEW YORK
SIRIUAL J. BARVALIA
105202
LICENSED PROFESSIONAL ENGINEER
Not valid without raised seal

IT IS A VIOLATION OF LAW FOR ANY PERSON, UNLESS THEY ARE ACTING UNDER THE DIRECTION OF A LICENSED PROFESSIONAL ENGINEER, ARCHITECT, LANDSCAPE ARCHITECT OR LAND SURVEYOR TO ALTER AN ITEM IN ANY WAY. IF AN ITEM BEARING THE STAMP OF A LICENSED PROFESSIONAL IS ALTERED, THE ALTERING ENGINEER, ARCHITECT, LANDSCAPE ARCHITECT OR LAND SURVEYOR SHALL STAMP THE DOCUMENT AND INCLUDE THE NOTATION "ALTERED BY" FOLLOWED BY THEIR SIGNATURE, THE DATE OF SUCH ALTERATION, AND A SPECIFIC DESCRIPTION OF THE ALTERATION.

No.	DATE	SUBMITTAL / REVISION DESCRIPTION	DB	APP
C	05/02/2023	FINAL SUBMISSION	AJ	SB
B	01/24/2023	DRAFT FINAL SUBMISSION	AJ	SB
A	10/28/2022	PROGRESS SUBMISSION	AJ	SB

CHAMPLAIN HUDSON POWER EXPRESS
SEGMENT 6 (PACKAGE 4A) - CP: BALLSTON TO GLENVILLE
NATIONAL GRID CORRIDOR
TYPICAL SECTION

KIEWIT PROJECT NO. 21162
KC PROJECT NO. 120174
DRAWING NO. **C-624**

DRAWN BY: AJ | DESIGNED BY: AJ | APPROVED BY: SB | SCALE AS NOTED | REV. NO. X | DATE 05/02/2023 | SH.NO. XXX OF XXX

File: P:\120174-CHPE_CABLE_INSTALL-KIEWIT\60_CAD\20_ENGINEERING_CAD_FILES\PACKAGE_4A\NY_HIGHWAY_DESIGN\01_KCE\SHEET_FILES\21162_4A_C-624.DWG Saved: 7/29/2023 10:33:41 AM Plotted: 7/29/2023 2:43:46 PM Current User: Jennefer Montalezo LastSavedBy: jmontalezo

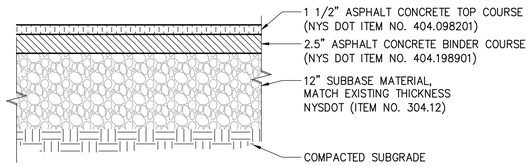

NOTES:
1. ABOVE SECTION IS THE MINIMUM FOR INSTALLATION. MATCH EXISTING SECTION IF EXISTING THICKNESS IS GREATER
2. ALL MATERIALS TO MEET NYSDOT STANDARD SPECIFICATIONS.
3. APPLY STRAIGHT TACK COAT BETWEEN PAVEMENT SECTIONS NYSDOT ITEM NO.407.0103
4. PRIVATE COMMERCIAL DRIVEWAYS TO UTILIZE COMMERCIAL DRIVEWAY SPECIFICATIONS AS SHOWN ON THE NYSDOT STANDARD SHEETS.

1 ASPHALT CONCRETE PAVEMENT DETAIL (PRIVATE DRIVEWAY)
SCALE: N.T.S.

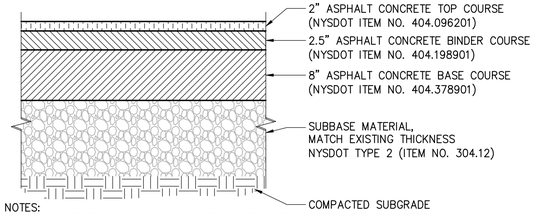

NOTES:
1. ABOVE SECTION IS THE MINIMUM FOR INSTALLATION. MATCH EXISTING SECTION IF EXISTING THICKNESS IS GREATER
2. ALL MATERIALS TO MEET NYSDOT STANDARD SPECIFICATIONS
3. APPLY STRAIGHT TACK COAT TO BETWEEN PAVEMENT SECTIONS NYSDOT ITEM 407.0103

2 ASPHALT CONCRETE PAVEMENT (WITHIN NYSDOT ROADWAYS)
SCALE: N.T.S.

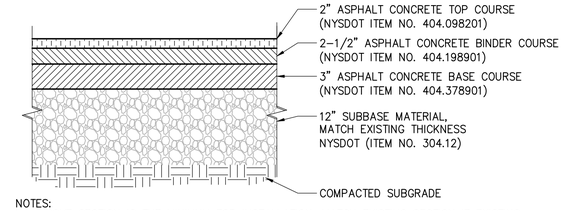

NOTES:
1. ABOVE SECTION IS THE MINIMUM FOR INSTALLATION. MATCH EXISTING SECTION IF EXISTING THICKNESS IS GREATER
2. ALL MATERIALS TO MEET NYSDOT STANDARD SPECIFICATIONS
3. APPLY STRAIGHT TACK COAT TO BETWEEN PAVEMENT SECTIONS NYSDOT ITEM NO.407.0103

3 ASPHALT CONCRETE PAVEMENT (WITHIN COUNTY OR TOWN ROADWAYS)
SCALE: N.T.S.

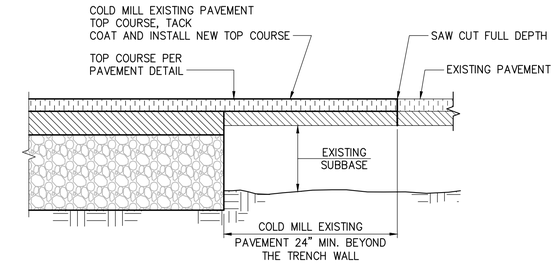

NOTE:
1. ALL MATERIALS TO MEET NYSDOT STANDARD SPECIFICATIONS

4 PAVEMENT TRANSITION DETAIL
SCALE: N.T.S.

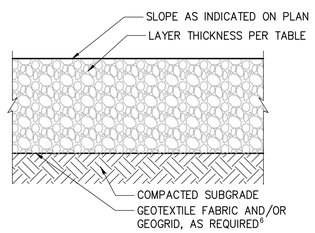

5 TEMPORARY ACCESS ROAD
SCALE: N.T.S.

TEMPORARY ACCESS ROAD SECTION[1,2,3,4]

CBR[5]	UNSTABILIZED	MIRAFI 180N GEOTEXTILE[6]	TENSAR BX1200 GEOGRID[6]	MIRAFI RSI SERIES GEOTEXTILE[6]
0.5	--	20 INCH RIP RAP[7] + 6 INCH AGGREGATE	--	20 INCH RIP RAP[7] + 4 INCH AGGREGATE (RS580I)
1.0	--	18 INCH AGGREGATE	12 INCH AGGREGATE	15 INCH AGGREGATE (RS280I)
1.5	--	12 INCH AGGREGATE	9 INCH AGGREGATE	9 INCH AGGREGATE (RS280I)
2.0	18 INCH AGGREGATE	11 INCH AGGREGATE	6 INCH AGGREGATE	9 INCH AGGREGATE (RS280I)
3.0+	15 INCH AGGREGATE	8 INCH AGGREGATE	6 INCH AGGREGATE	9 INCH AGGREGATE (RS280I)

NOTES:
[1] TEMPORARY ACCESS ROAD SECTIONS PER KIEWIT ENGINEERING (NY) CORP.
[2] AGGREGATE SHALL BE NYSDOT TYPE 2 CRUSHED AGGREGATE OR APPROVED ALTERNATIVE.
[3] DESIGN CONSIDERS 1,000 PASSES OF MAXIMUM 22-KIP AXLE LOAD AND A DESIGN RUT DEPTH OF 3 INCHES. ADDITIONAL AXLE PASSES, HEAVIER AXLE LOADS, AND DETERIORATED SUBGRADE CONDITIONS MAY REQUIRE THICKER AGGREGATE SECTIONS OR ADDITIONAL MAINTENANCE.
[4] ALTERNATE TEMPORARY ACCESS ROAD DESIGNS MAY BE PROVIDED BY KIEWIT ENGINEERING, AS REQUIRED, BASED ON FIELD CONDITIONS AND TRAFFIC LOADING.
[5] ESTIMATE CBR IN THE FIELD USING A DYNAMIC CONE PENETROMETER OR ALTERNATIVE METHOD APPROVED BY GEOTECHNICAL ENGINEER OF RECORD (EOR). CBR OF IN-SITU SOIL MAY VARY SEASONALLY DUE TO FREEZE/THAW AND BASED ON MOISTURE CONDITIONS.
[6] GEOGRID AND GEOTEXTILE
[A] GEOGRID AND GEOTEXTILES SHALL BE INSTALLED PER MANUFACTURER'S SPECIFICATION INCLUDING OVERLAP AND EDGE DETAILS.
[B] SPECIFIED GEOTEXTILE OR GEOGRID MAY BE REPLACED BY EQUIVALENT MATERIAL APPROVED BY EOR.
[C] GEOTEXTILE IS REQUIRED IN REGULATED WETLANDS AND AGRICULTURAL LANDS.
[D] GEOTEXTILE SEPARATOR FABRIC IS REQUIRED BENEATH GEOGRID ON COHESIVE SUBGRADE
[7] RIP RAP
[A] RIP RAP SHALL BE NYSDOT LIGHT STONE FILL OR APPROVED ALTERNATIVE.
[B] A LAYER OF #57 STONE IS RECOMMENDED ON TOP OF GEOTEXTILE TO PREVENT DAMAGING OR PUNCHING OF THE GEOTEXTILE FABRIC WHERE RIP RAP IS USED.

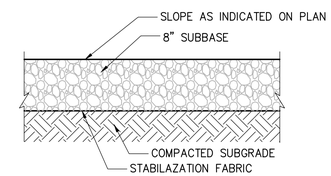

6 GRAVEL PAVEMENT
SCALE: N.T.S.

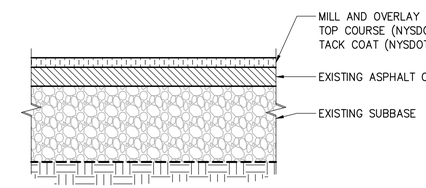

NOTES:
1. APPLY TACKCOAT TO MILLED SURFACE PRIOR TO PLACING ASPHALT CONCRETE TOP COURSE.
2. ALL MATERIALS TO MEET NYSDOT STANDARD SPECIFICATIONS

7 MILL AND OVERLAY ASPHALT CONCRETE PAVEMENT DETAIL
SCALE: N.T.S.

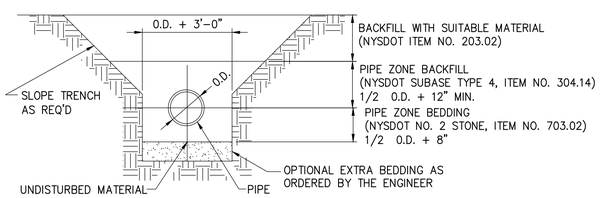

NOTES:
1. WHERE IDENTIFIED ON PLANS, CULVERT REPLACEMENTS AND/OR REPAIR TO BE COMPLETED IN ACCORDANCE WITH NYSDOT STANDARD SHEETS (NYSDOT STANDARD SHEET GROUP 603 CULVERTS AND STORM DRAINS AND NYSDOT BRIDGE DETAIL SHEETS BD-CB1 THRU BD-CB13)

8 CULVERT REPLACEMENT
SCALE: N.T.S.

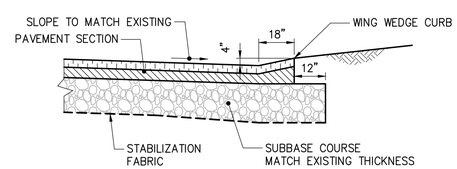

NOTE:
1. ALL MATERIALS TO MEET NYSDOT STANDARD SPECIFICATIONS

9 WING WEDGE CURB DETAIL
SCALE: N.T.S.

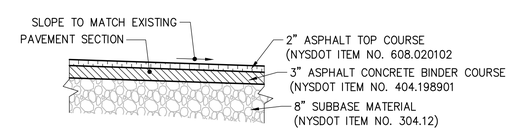

10 BIKE PATH RESTORATION DETAIL
SCALE: N.T.S.

CHPE Champlain Hudson Power Express

Kiewit

Engineering and Land Surveying, P.C.

KC ENGINEERING AND LAND SURVEYING, P.C.
STATE OF NEW YORK · SHRUTAL J. BARYALIYA · 105202 · LICENSED PROFESSIONAL ENGINEER

IT IS A VIOLATION OF LAW FOR ANY PERSON, UNLESS THEY ARE ACTING UNDER THE DIRECTION OF A LICENSED PROFESSIONAL ENGINEER, ARCHITECT, LANDSCAPE ARCHITECT OR LAND SURVEYOR TO ALTER AN ITEM IN ANY WAY. IF AN ITEM BEARING THE STAMP OF A LICENSED PROFESSIONAL IS ALTERED, THE ALTERING ENGINEER, ARCHITECT, LANDSCAPE ARCHITECT OR LAND SURVEYOR SHALL STAMP THE DOCUMENT AND INCLUDE THE NOTATION "ALTERED BY" FOLLOWED BY THEIR SIGNATURE, THE DATE OF SUCH ALTERATION, AND A SPECIFIC DESCRIPTION OF THE ALTERATION.

No.	DATE	SUBMITTAL / REVISION DESCRIPTION	DB	APP
0	08/03/2023	ISSUED FOR CONSTRUCTION SUBMISSION	JM	SB

CHAMPLAIN HUDSON POWER EXPRESS
SEGMENT 6 (PACKAGE 4A) - CP: BALLSTON TO GLENVILLE
SURFACE RESTORATION DETAILS

KIEWIT PROJECT NO. 21162
KC PROJECT NO. 120174
DRAWING NO. **C-631**

DRAWN BY: BL | DESIGNED BY: BL | APPROVED BY: SB | SCALE AS NOTED | REV. NO. 0 | DATE 08/03/2023 | SH.NO. XXX OF --

File: P:\120174-CHPE_CABLE_INSTALL-KIEWIT\60_CAD\20_ENGINEERING_CAD_FILES\PACKAGE_4A\NY_HIGHWAY_DESIGN\01_KCE\SHEET_FILES\21162_4A_C-631.DWG Saved: 7/20/2023 11:11:47 AM Plotted: 7/29/2023 2:26:22 PM Current User: Jennefer Montaleza LastSavedBy: jmontaleza

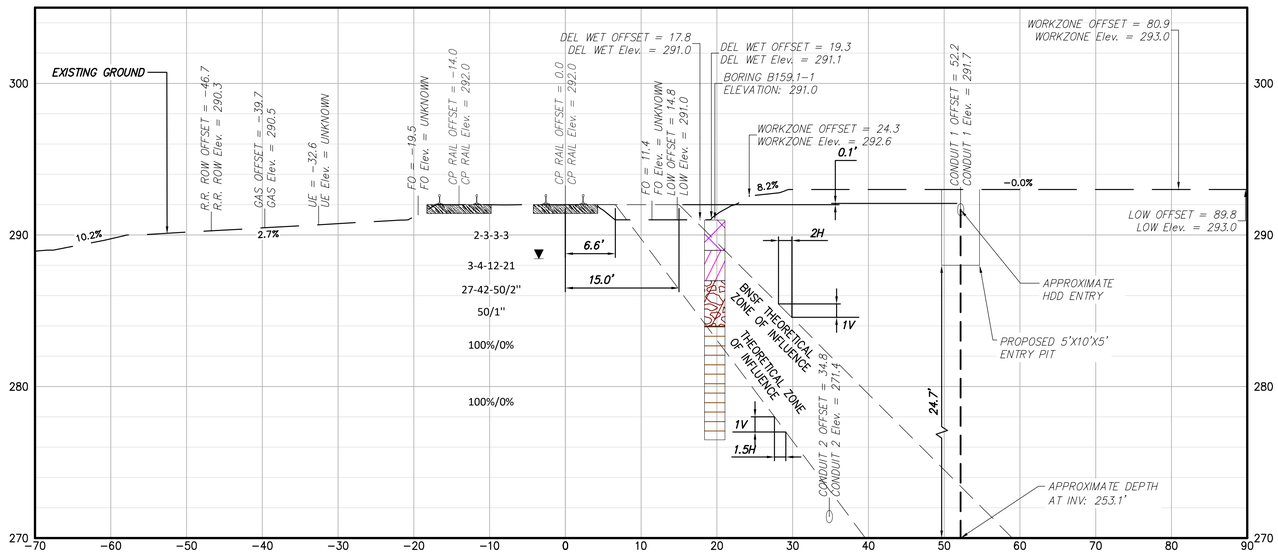

2 HDD 51 CONDUIT 1 ENTRY PIT CUT SECTION; STA. 40020+99

CP RAIL CANADIAN MAINLINE MP: 30.83

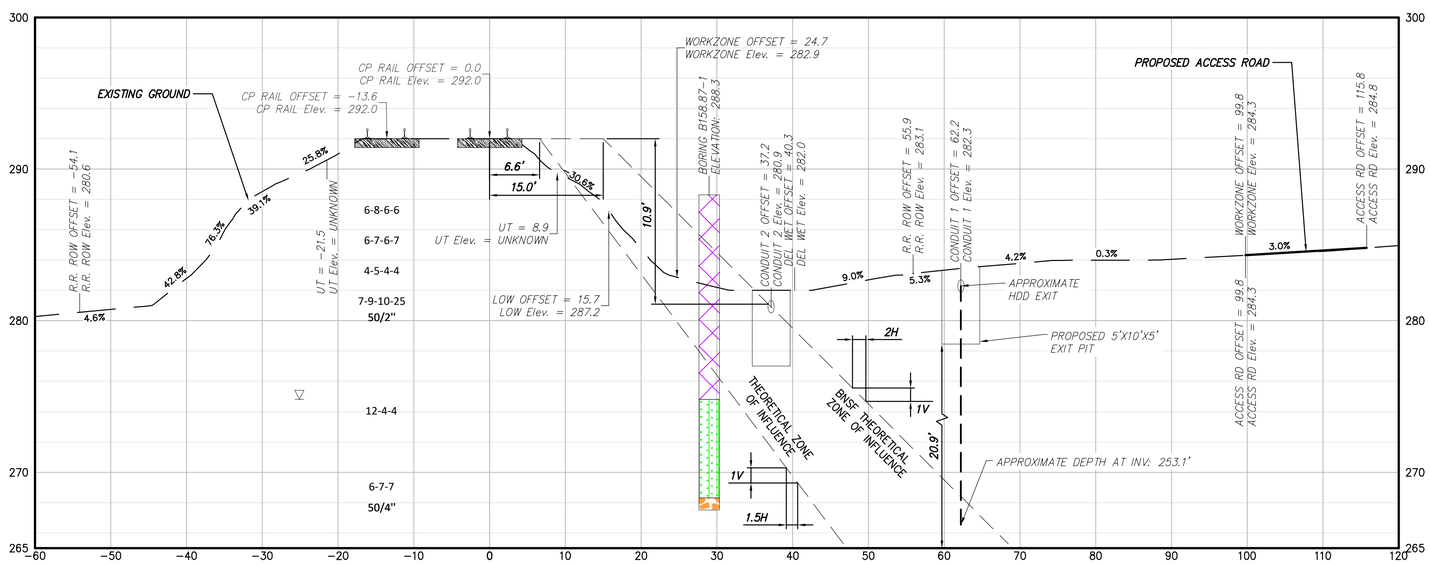

1 HDD 51 CONDUIT 1 EXIT PIT CUT SECTION; STA. 40002+06

CP RAIL CANADIAN MAINLINE MP: 31.19

BORING LOG STRIP LEGEND

B101

Blow Counts per 6" = 10-10-10

Recovery %/RQD % = 95%/90%

11000psi =UCS

2D strip logs shown at 10x exaggeration

3D strip logs have no exaggeration

Legend	
ASPHALT	Asphalt
Bedrock	Bedrock
Boulder	Boulder
CH	Fat CLAY
CH-MH	SILTY Fat CLAY
CL	Lean CLAY
CL-ML	SILTY CLAY
CONCRETE	Concrete
Fill	Fill
GC	CLAYEY GRAVEL
GC-GM	SILTY CLAYEY GRAVEL
GM	SILTY GRAVEL
GP	Poorly Graded GRAVEL
GP-GC	Poorly Graded Gravel with CLAY
GP-GM	Poorly Graded GRAVEL with SILT
GW	Well Graded GRAVEL
GW-GC	Well Graded GRAVEL with CLAY
GW-GM	Well Graded GRAVEL with SILT
Limestone	Limestone
MH	Elastic SILT
ML	SILT
OH	ORGANIC Fat CLAY
OL	ORGANIC Lean CLAY
OL/OH	ORGANIC SOIL
PT	PEAT
Rock	Rock
Sandstone	Sandstone
SC	CLAYEY SAND
SC-SM	SILT, CLAYEY SAND
SHALE	Shale
SILTSTONE	Siltstone
SM	SILTY SAND
SP	Poorly Graded SAND
SP-SC	Poorly Graded SAND with CLAY
SP-SM	Poorly Graded SAND with SILT
SW	Well graded SAND
SW-SC	Well Graded SAND with CLAY
SW-SM	Well Graded SAND with SILT
Topsoil	Topsoil
USGS 601	Gravel or Conglomerate 1
USGS 654	Subgraywacke
USGS 670	Interbedded Sandstone and Shale
USGS 702	Quartzite
USGS 705	Schist
USGS 705	Schist
USGS 708	Gneiss
USGS 708	Gneiss
USGS 718	Granite 1
Void	Void
Water	Water
Weathered Rock	Undefined
Water Table	Water Table during drilling
Delayed Water Table	Water Table after drilling

0 10 20 Scale in feet

CHPE Champlain Hudson Power Express

Kiewit

CHA
III Winners Circle, PO Box 5269
Albany, NY 12205-0269
518.453.4500 . www.chacompanies.com

STATE OF NEW YORK · JEFFREY O'DONNELL · 087450 · LICENSED PROFESSIONAL ENGINEER

IT IS A VIOLATION OF LAW FOR ANY PERSON, UNLESS THEY ARE ACTING UNDER THE DIRECTION OF A LICENSED PROFESSIONAL ENGINEER, ARCHITECT, LANDSCAPE ARCHITECT OR LAND SURVEYOR TO ALTER AN ITEM IN ANY WAY. IF AN ITEM BEARING THE STAMP OF A LICENSED PROFESSIONAL IS ALTERED, THE ALTERING ENGINEER, ARCHITECT, LANDSCAPE ARCHITECT OR LAND SURVEYOR SHALL STAMP THE DOCUMENT AND INCLUDE THE NOTATION "ALTERED BY" FOLLOWED BY THEIR SIGNATURE, THE DATE OF SUCH ALTERATION, AND A SPECIFIC DESCRIPTION OF THE ALTERATION.

No.	DATE	SUBMITTAL / REVISION DESCRIPTION	DB	APP
0	08/03/2023	ISSUED FOR CONSTRUCTION SUBMISSION	SPB	JEO

CHAMPLAIN HUDSON POWER EXPRESS
SEGMENT 6 (PACKAGE 4A) - CP: BALLSTON TO GLENVILLE
RAIL CROSS SECTION DETAILS HDD 51

DRAWN BY: JDL DESIGNED BY: JDL APPROVED BY: JEO

SCALE AS NOTED REV. NO. F

KIEWIT PROJECT NO. 21162

CHA PROJECT NO. 066076

DRAWING NO. C-641

DATE 8/03/2023

SH.NO.

File: V:\PROJECTS\ANY\K6\066076.000\09_DESIGN\DRAWINGS\01_SHEETS\DESIGN PACKAGE 4\DESIGN PACKAGE A\066076_4A - C-301_C-301A.1.DWG Saved: 8/1/2023 4:59:28 PM Plotted: 8/1/2023 5:05:51 PM Current User: Snyder, Morgan LastSavedBy: 6043

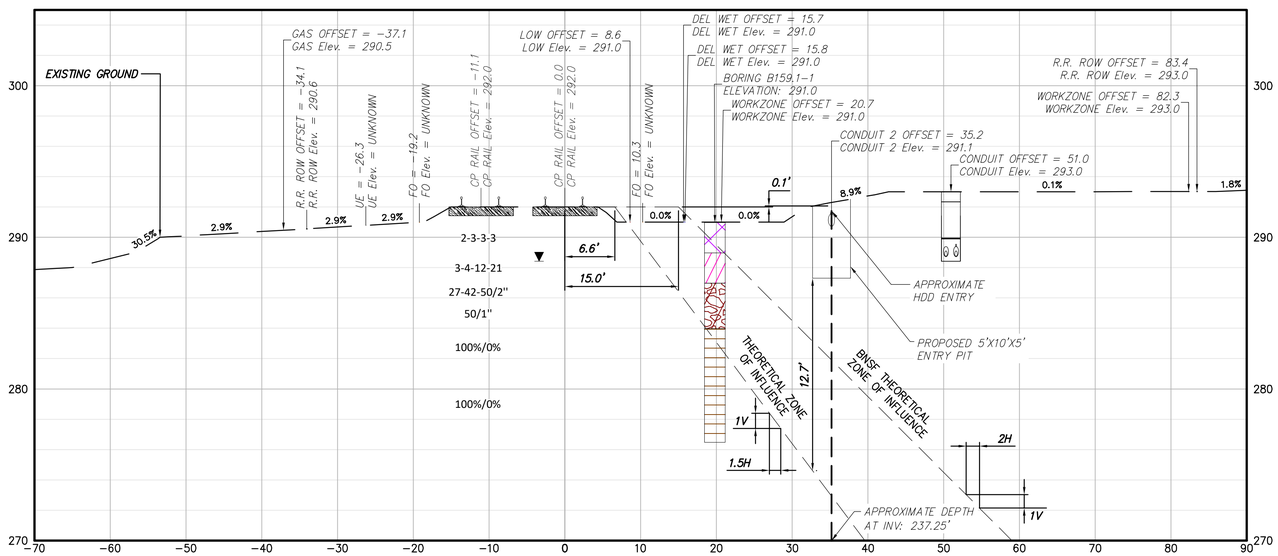

4 HDD 51 CONDUIT 2 ENTRY PIT CUT SECTION; STA. 40022+13

CP RAIL CANADIAN MAINLINE MP: 30.81

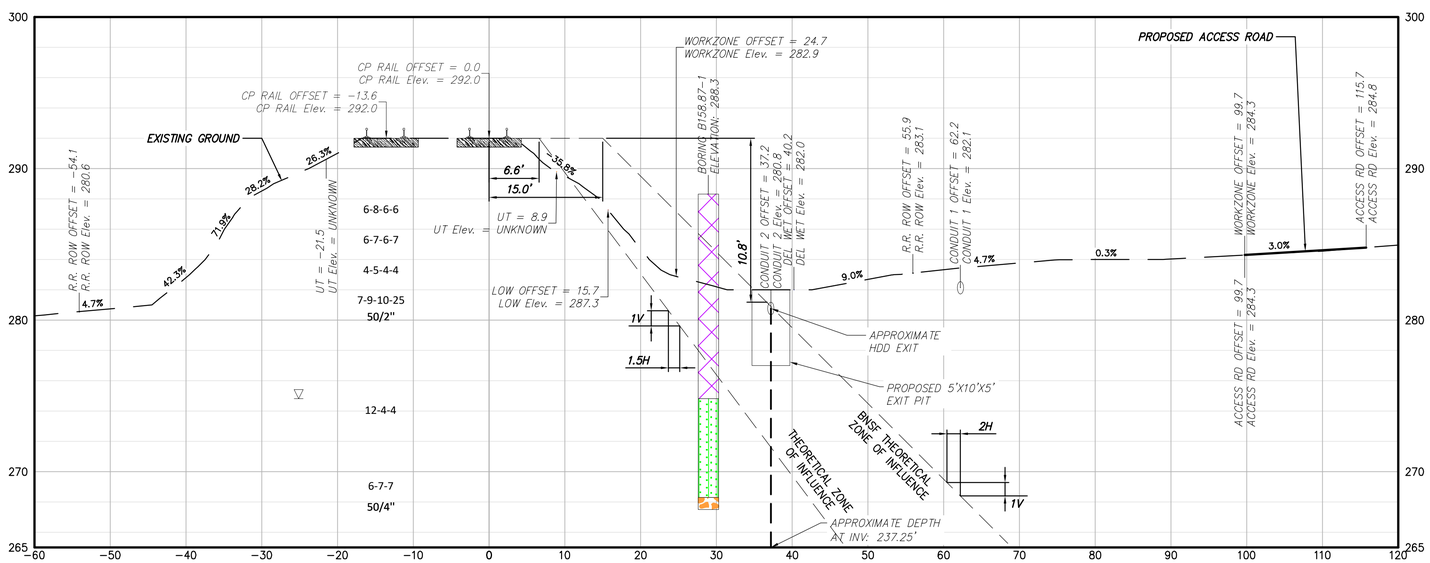

3 HDD 51 CONDUIT 2 EXIT PIT CUT SECTION; STA. 40002+07

CP RAIL CANADIAN MAINLINE MP: 31.19

BORING LOG STRIP LEGEND

B101

Blow Counts per 6" = 10-10-10

Recovery %/RQD % = 95%/90%

11000psi =UCS

2D strip logs shown at 10x exaggeration

3D strip logs have no exaggeration

Legend	
ASPHALT	Asphalt
Bedrock	Bedrock
Boulder	Boulder
CH	Fat CLAY
CH-MH	SILTY Fat CLAY
CL	Lean CLAY
CL-ML	SILTY CLAY
CONCRETE	Concrete
Fill	Fill
GC	CLAYEY GRAVEL
GC-GM	SILTY CLAYEY GRAVEL
GM	SILTY GRAVEL
GP	Poorly Graded GRAVEL
GP-GC	Poorly Graded Gravel with CLAY
GP-GM	Poorly Graded GRAVEL with SILT
GW	Well Graded GRAVEL
GW-GC	Well Graded GRAVEL with CLAY
GW-GM	Well Graded GRAVEL with SILT
Limestone	Limestone
MH	Elastic SILT
ML	SILT
OH	ORGANIC Fat CLAY
OL	ORGANIC Lean CLAY
OL/OH	ORGANIC SOIL
PT	PEAT
Rock	Rock
Sandstone	Sandstone
SC	CLAYEY SAND
SC-SM	SILT, CLAYEY SAND
SHALE	Shale
SILTSTONE	Siltstone
SM	SILTY SAND
SP	Poorly Graded SAND
SP-SC	Poorly Graded SAND with CLAY
SP-SM	Poorly Graded SAND with SILT
SW	Well graded SAND
SW-SC	Well Graded SAND with CLAY
SW-SM	Well Graded SAND with SILT
Topsoil	Topsoil
USGS 601	Gravel or Conglomerate 1
USGS 654	Subgraywacke
USGS 670	Interbedded Sandstone and Shale
USGS 702	Quartzite
USGS 705	Schist
USGS 705	Schist
USGS 708	Gneiss
USGS 708	Gneiss
USGS 718	Granite 1
Void	Void
Water	Water
Weathered Rock	Undefined
Water Table	Water Table during drilling
Delayed Water Table	Water Table after drilling

10 5 0

0 10 20

Scale in feet

CHPE Champlain Hudson Power Express

Kiewit

CHA
III Winners Circle, PO Box 5269
Albany, NY 12205-0269
518.453.4500 . www.chacompanies.com

STATE OF NEW YORK · JEFFREY O'DONNELL · 087450 · LICENSED PROFESSIONAL ENGINEER

IT IS A VIOLATION OF LAW FOR ANY PERSON, UNLESS THEY ARE ACTING UNDER THE DIRECTION OF A LICENSED PROFESSIONAL ENGINEER, ARCHITECT, LANDSCAPE ARCHITECT OR LAND SURVEYOR TO ALTER AN ITEM IN ANY WAY. IF AN ITEM BEARING THE STAMP OF A LICENSED PROFESSIONAL IS ALTERED, THE ALTERING ENGINEER, ARCHITECT, LANDSCAPE ARCHITECT OR LAND SURVEYOR SHALL STAMP THE DOCUMENT AND INCLUDE THE NOTATION "ALTERED BY" FOLLOWED BY THEIR SIGNATURE, THE DATE OF SUCH ALTERATION, AND A SPECIFIC DESCRIPTION OF THE ALTERATION.

No.	DATE	SUBMITTAL / REVISION DESCRIPTION	DB	APP
0	08/03/2023	ISSUED FOR CONSTRUCTION SUBMISSION	SPB	JEO

CHAMPLAIN HUDSON POWER EXPRESS
SEGMENT 6 (PACKAGE 4A) - CP: BALLSTON TO GLENVILLE
RAIL CROSS SECTION DETAILS HDD 51

DRAWN BY: JDL DESIGNED BY: JDL APPROVED BY: JEO SCALE AS NOTED REV. NO. F

KIEWIT PROJECT NO. 21162

CHA PROJECT NO. 066076

DRAWING NO. **C-641.1**

DATE 8/03/2023

SH.NO.

File: V:\PROJECTS\ANY\K6\066076.000\09_DESIGN\DRAWINGS\01_SHEETS\DESIGN PACKAGE 4\DESIGN PACKAGE A\066076_4A - C-301_C-301A1.DWG Saved: 8/1/2023 4:59:28 PM Plotted: 8/1/2023 5:06:39 PM Current User: Snyder, Morgan LastSavedBy: 6043

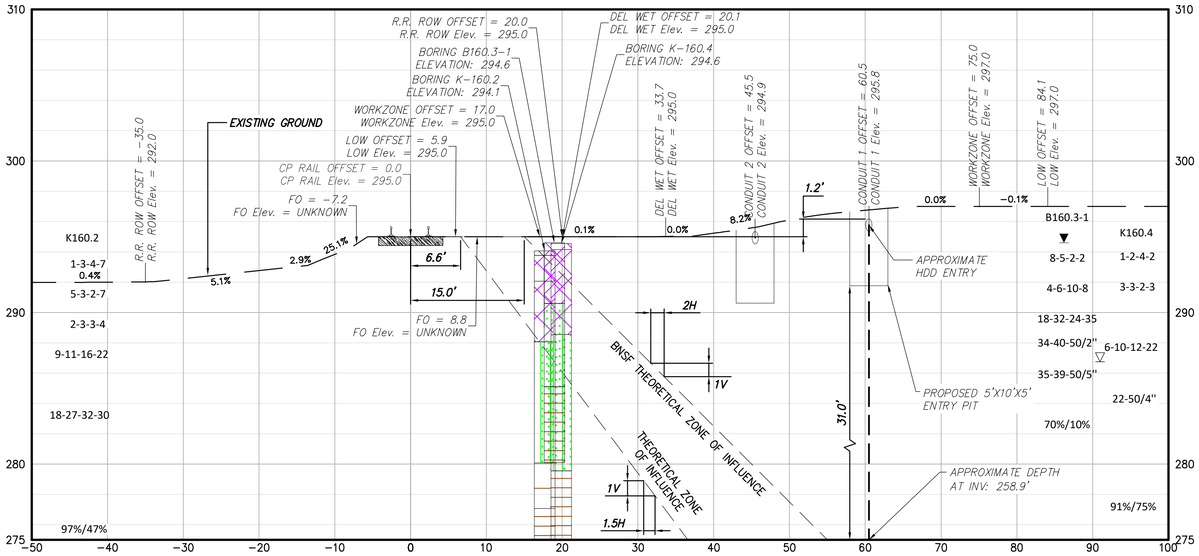

2 HDD 52 CONDUIT 1 ENTRY PIT CUT SECTION; STA. 40087+79

CP RAIL CANADIAN MAINLINE MP: 29.87

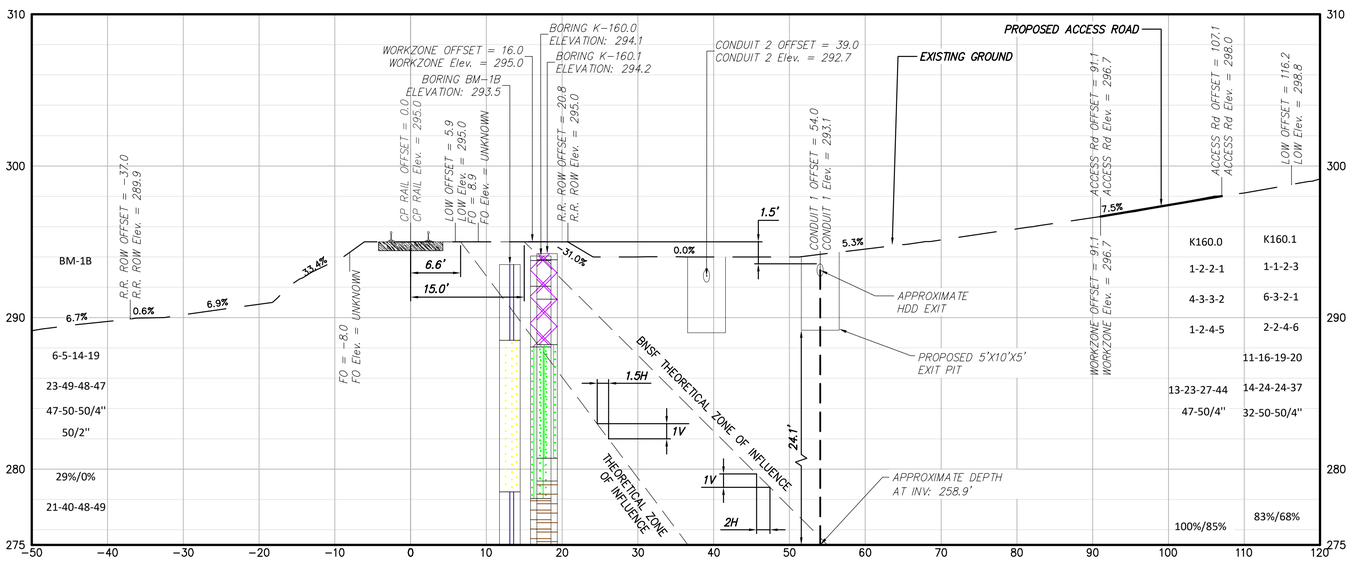

1 HDD 52 CONDUIT 1 EXIT PIT CUT SECTION; STA. 40060+94

CP RAIL CANADIAN MAINLINE MP: 30.38

BORING LOG STRIP LEGEND

B101

Blow Counts per 6" = 10-10-10

Recovery %/RQD % = 95%/90%

11000psi =UCS

2D strip logs shown at 10x exaggeration

3D strip logs have no exaggeration

Legend	
ASPHALT	Asphalt
Bedrock	Bedrock
Boulder	Boulder
CH	Fat CLAY
CH-MH	SILTY Fat CLAY
CL	Lean CLAY
CL-ML	SILTY CLAY
CONCRETE	Concrete
Fill	Fill
GC	CLAYEY GRAVEL
GC-GM	SILTY CLAYEY GRAVEL
GM	SILTY GRAVEL
GP	Poorly Graded GRAVEL
GP-GC	Poorly Graded Gravel with CLAY
GP-GM	Poorly Graded GRAVEL with SILT
GW	Well Graded GRAVEL
GW-GC	Well Graded GRAVEL with CLAY
GW-GM	Well Graded GRAVEL with SILT
Limestone	Limestone
MH	Elastic SILT
ML	SILT
OH	ORGANIC Fat CLAY
OL	ORGANIC Lean CLAY
OL/OH	ORGANIC SOIL
PT	PEAT
Rock	Rock
Sandstone	Sandstone
SC	CLAYEY SAND
SC-SM	SILT, CLAYEY SAND
SHALE	Shale
SILTSTONE	Siltstone
SM	SILTY SAND
SP	Poorly Graded SAND
SP-SC	Poorly Graded SAND with CLAY
SP-SM	Poorly Graded SAND with SILT
SW	Well graded SAND
SW-SC	Well Graded SAND with CLAY
SW-SM	Well Graded SAND with SILT
Topsoil	Topsoil
USGS 601	Gravel or Conglomerate I
USGS 654	Subgraywacke
USGS 670	Interbedded Sandstone and Shale
USGS 702	Quartzite
USGS 705	Schist
USGS 705	Schist
USGS 708	Gneiss
USGS 708	Gneiss
USGS 718	Granite I
Void	Void
Water	Water
Weathered Rock	Undefined
Water Table	Water Table during drilling
Delayed Water Table	Water Table after drilling

0 10 20 Scale in feet

CHPE Champlain Hudson Power Express

Kiewit

CHA
III Winners Circle, PO Box 5269
Albany, NY 12205-0269
518.453.4500 . www.chacompanies.com

STATE OF NEW YORK · JEFFREY O'DONNELL · 087450 · LICENSED PROFESSIONAL ENGINEER

IT IS A VIOLATION OF LAW FOR ANY PERSON, UNLESS THEY ARE ACTING UNDER THE DIRECTION OF A LICENSED PROFESSIONAL ENGINEER, ARCHITECT, LANDSCAPE ARCHITECT OR LAND SURVEYOR TO ALTER AN ITEM IN ANY WAY. IF AN ITEM BEARING THE STAMP OF A LICENSED PROFESSIONAL IS ALTERED, THE ALTERING ENGINEER, ARCHITECT, LANDSCAPE ARCHITECT OR LAND SURVEYOR SHALL STAMP THE DOCUMENT AND INCLUDE THE NOTATION "ALTERED BY" FOLLOWED BY THEIR SIGNATURE, THE DATE OF SUCH ALTERATION, AND A SPECIFIC DESCRIPTION OF THE ALTERATION.

No.	DATE	SUBMITTAL / REVISION DESCRIPTION	DB	APP
0	08/03/2023	ISSUED FOR CONSTRUCTION SUBMISSION	SPB	JEO

CHAMPLAIN HUDSON POWER EXPRESS
SEGMENT 6 (PACKAGE 4A) - CP: BALLSTON TO GLENVILLE
RAIL CROSS SECTION DETAILS HDD 52

KIEWIT PROJECT NO. 21162

CHA PROJECT NO. 066076

DRAWING NO. C-642

DRAWN BY: CJL | DESIGNED BY: CJL | APPROVED BY: JEO | SCALE AS NOTED | REV. NO. F | DATE 8/03/2023 | SH.NO.

File: V:\PROJECTS\ANY\K6\066076.000\09_DESIGN\DRAWINGS\01_SHEETS\DESIGN PACKAGE 4\DESIGN PACKAGE 4A\066076_4A - C-302_C-302A.2.DWG Saved: 7/31/2023 1:01:17 PM Plotted: 7/31/2023 2:52:49 PM Current User: Snyder, Morgan LastSavedBy: 8275

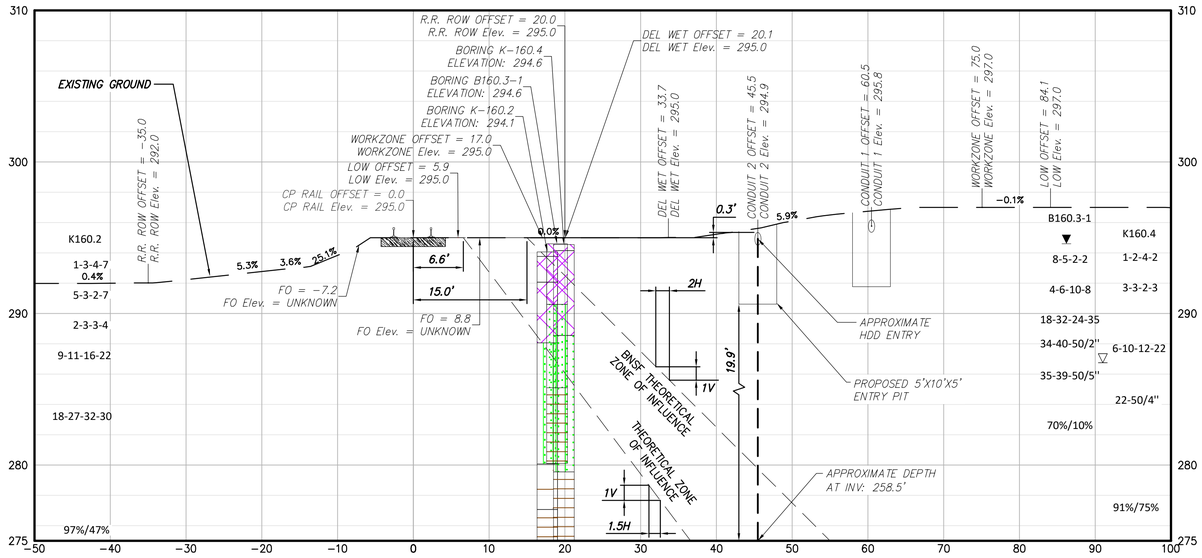

4 HDD 52 CONDUIT 2 ENTRY PIT CUT SECTION; STA. 40087+79

CP RAIL CANADIAN MAINLINE MP: 29.87

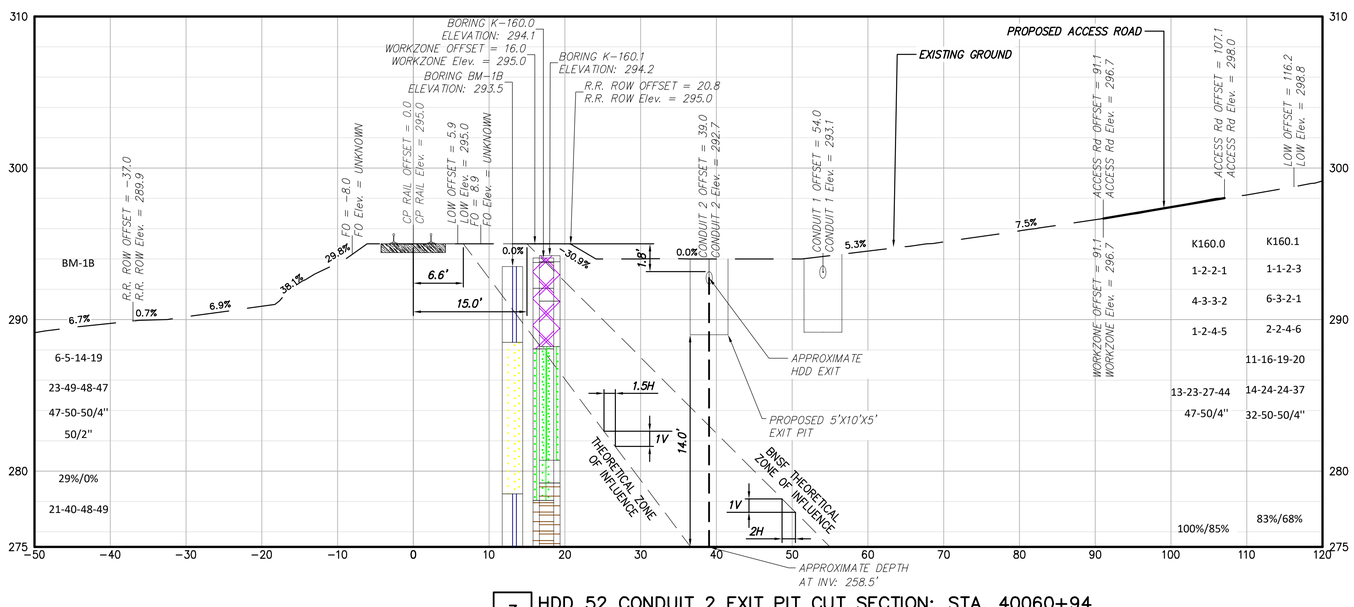

3 HDD 52 CONDUIT 2 EXIT PIT CUT SECTION; STA. 40060+94

CP RAIL CANADIAN MAINLINE MP: 30.38

BORING LOG STRIP LEGEND

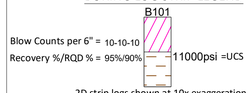

2D strip logs shown at 10x exaggeration
3D strip logs have no exaggeration

Legend	
ASPHALT	Asphalt
Bedrock	Bedrock
Boulder	Boulder
CH	Fat CLAY
CH-MH	SILTY Fat CLAY
CL	Lean CLAY
CL-ML	SILTY CLAY
CONCRETE	Concrete
Fill	Fill
GC	CLAYEY GRAVEL
GC-GM	SILTY CLAYEY GRAVEL
GM	SILTY GRAVEL
GP	Poorly Graded GRAVEL
GP-GC	Poorly Graded Gravel with CLAY
GP-GM	Poorly Graded GRAVEL with SILT
GW	Well Graded GRAVEL
GW-GC	Well Graded GRAVEL with CLAY
GW-GM	Well Graded GRAVEL with SILT
Limestone	Limestone
MH	Elastic SILT
ML	SILT
OH	ORGANIC Fat CLAY
OL	ORGANIC Lean CLAY
OL/OH	ORGANIC SOIL
PT	PEAT
Rock	Rock
Sandstone	Sandstone
SC	CLAYEY SAND
SC-SM	SILT, CLAYEY SAND
SHALE	Shale
SILTSTONE	Siltstone
SM	SILTY SAND
SP	Poorly Graded SAND
SP-SC	Poorly Graded SAND with CLAY
SP-SM	Poorly Graded SAND with SILT
SW	Well graded SAND
SW-SC	Well Graded SAND with CLAY
SW-SM	Well Graded SAND with SILT
Topsoil	Topsoil
USGS 601	Gravel or Conglomerate I
USGS 654	Subgraywacke
USGS 670	Interbedded Sandstone and Shale
USGS 702	Quartzite
USGS 705	Schist
USGS 705	Schist
USGS 708	Gneiss
USGS 708	Gneiss
USGS 718	Granite I
Void	Void
Water	Water
Weathered Rock	Undefined
Water Table	Water Table during drilling
Delayed Water Table	Water Table after drilling

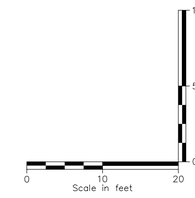

CHPE Champlain Hudson Power Express

Kiewit

CHA
III Winners Circle, PO Box 5269
Albany, NY 12205-0269
518.453.4500 . www.chacompanies.com

STATE OF NEW YORK · JEFFREY O'DONNELL · 087450 · LICENSED PROFESSIONAL ENGINEER

IT IS A VIOLATION OF LAW FOR ANY PERSON, UNLESS THEY ARE ACTING UNDER THE DIRECTION OF A LICENSED PROFESSIONAL ENGINEER, ARCHITECT, LANDSCAPE ARCHITECT OR LAND SURVEYOR TO ALTER AN ITEM IN ANY WAY. IF AN ITEM BEARING THE STAMP OF A LICENSED PROFESSIONAL IS ALTERED, THE ALTERING ENGINEER, ARCHITECT, LANDSCAPE ARCHITECT OR LAND SURVEYOR SHALL STAMP THE DOCUMENT AND INCLUDE THE NOTATION "ALTERED BY" FOLLOWED BY THEIR SIGNATURE, THE DATE OF SUCH ALTERATION, AND A SPECIFIC DESCRIPTION OF THE ALTERATION.

No.	DATE	SUBMITTAL / REVISION DESCRIPTION	DB	APP
0	08/03/2023	ISSUED FOR CONSTRUCTION SUBMISSION	SPB	JEO

CHAMPLAIN HUDSON POWER EXPRESS
SEGMENT 6 (PACKAGE 4A) - CP: BALLSTON TO GLENVILLE
RAIL CROSS SECTION DETAILS HDD 52

KIEWIT PROJECT NO. 21162
CHA PROJECT NO. 066076
DRAWING NO. **C-642.1**

DRAWN BY: CJL | DESIGNED BY: CJL | APPROVED BY: JEO | SCALE AS NOTED | REV. NO. F | DATE 8/03/2023 | SH.NO.

File: V:\PROJECTS\ANY\K6\066076.000\09_DESIGN\DRAWINGS\01_SHEETS\DESIGN PACKAGE 4\DESIGN PACKAGE 4\066076_4A - C-302_C-302A.2.DWG Saved: 7/31/2023 1:01:17 PM Plotted: 7/31/2023 2:53:10 PM Current User: Snyder, Morgan LastSavedBy: 8275

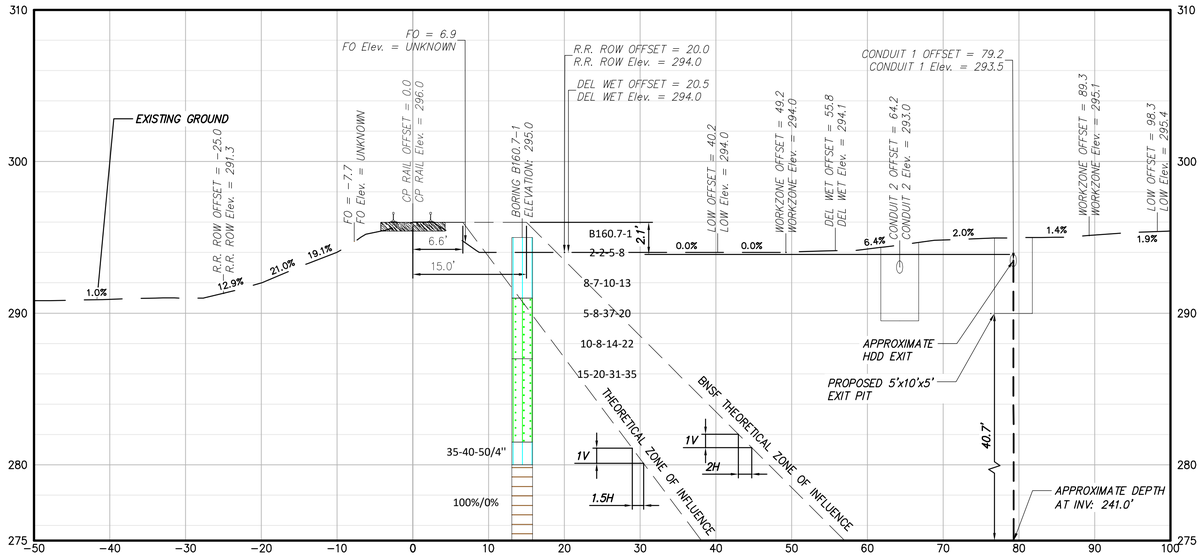

2 HDD 53 CONDUIT 1 EXIT PIT CUT SECTION; STA. 40106+60

CP RAIL CANADIAN MAINLINE MP: 29.52

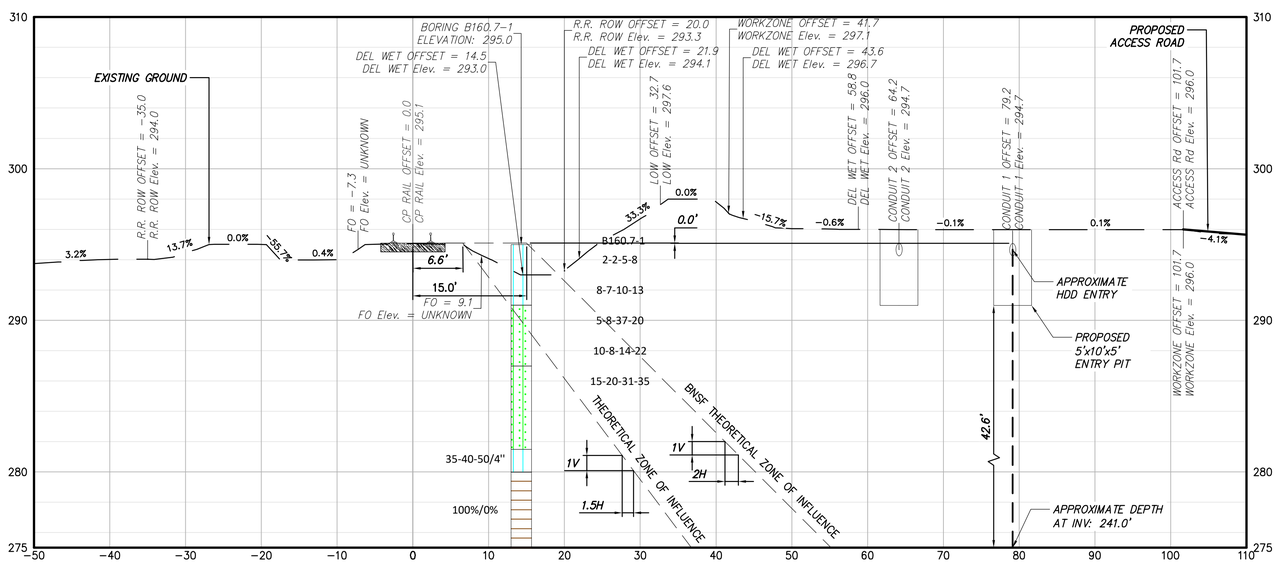

1 HDD 53 CONDUIT 1 ENTRY PIT CUT SECTION; STA. 40098+58

CP RAIL CANADIAN MAINLINE MP: 29.67

BORING LOG STRIP LEGEND

B101

Blow Counts per 6" = 10-10-10

Recovery %/RQD % = 95%/90%

11000psi =UCS

2D strip logs shown at 10x exaggeration

3D strip logs have no exaggeration

Legend	
ASPHALT	Asphalt
Bedrock	Bedrock
Boulder	Boulder
CH	Fat CLAY
CH-MH	SILTY Fat CLAY
CL	Lean CLAY
CL-ML	SILTY CLAY
CONCRETE	Concrete
Fill	Fill
GC	CLAYEY GRAVEL
GC-GM	SILTY CLAYEY GRAVEL
GM	SILTY GRAVEL
GP	Poorly Graded GRAVEL
GP-GC	Poorly Graded Gravel with CLAY
GP-GM	Poorly Graded GRAVEL with SILT
GW	Well Graded GRAVEL
GW-GC	Well Graded GRAVEL with CLAY
GW-GM	Well Graded GRAVEL with SILT
Limestone	Limestone
MH	Elastic SILT
ML	SILT
OH	ORGANIC Fat CLAY
OL	ORGANIC Lean CLAY
OL/OH	ORGANIC SOIL
PT	PEAT
Rock	Rock
Sandstone	Sandstone
SC	CLAYEY SAND
SC-SM	SILT, CLAYEY SAND
SHALE	Shale
SILTSTONE	Siltstone
SM	SILTY SAND
SP	Poorly Graded SAND
SP-SC	Poorly Graded SAND with CLAY
SP-SM	Poorly Graded SAND with SILT
SW	Well graded SAND
SW-SC	Well Graded SAND with CLAY
SW-SM	Well Graded SAND with SILT
Topsoil	Topsoil
USGS 601	Gravel or Conglomerate 1
USGS 654	Subgraywacke
USGS 670	Interbedded Sandstone and Shale
USGS 702	Quartzite
USGS 705	Schist
USGS 705	Schist
USGS 708	Gneiss
USGS 708	Gneiss
USGS 718	Granite 1
Void	Void
Water	Water
Weathered Rock	Undefined
Water Table	Water Table during drilling
Delayed Water Table	Water Table after drilling

0 10 20 Scale in feet

CHPE Champlain Hudson Power Express

Kiewit

CHA
III Winners Circle, PO Box 5269
Albany, NY 12205-0269
518.453.4500 . www.chacompanies.com

STATE OF NEW YORK · JEFFREY O'DONNELL · 087450 · LICENSED PROFESSIONAL ENGINEER

IT IS A VIOLATION OF LAW FOR ANY PERSON, UNLESS THEY ARE ACTING UNDER THE DIRECTION OF A LICENSED PROFESSIONAL ENGINEER, ARCHITECT, LANDSCAPE ARCHITECT OR LAND SURVEYOR TO ALTER AN ITEM IN ANY WAY. IF AN ITEM BEARING THE STAMP OF A LICENSED PROFESSIONAL IS ALTERED, THE ALTERING ENGINEER, ARCHITECT, LANDSCAPE ARCHITECT OR LAND SURVEYOR SHALL STAMP THE DOCUMENT AND INCLUDE THE NOTATION "ALTERED BY" FOLLOWED BY THEIR SIGNATURE, THE DATE OF SUCH ALTERATION, AND A SPECIFIC DESCRIPTION OF THE ALTERATION.

No.	DATE	SUBMITTAL / REVISION DESCRIPTION	DB	APP
0	08/03/2023	ISSUED FOR CONSTRUCTION SUBMISSION	SPB	JEO

CHAMPLAIN HUDSON POWER EXPRESS
SEGMENT 6 (PACKAGE 4A) - CP: BALLSTON TO GLENVILLE
RAIL CROSS SECTION DETAILS HDD 53

KIEWIT PROJECT NO. 21162

CHA PROJECT NO. 066076

DRAWING NO. **C-643**

DRAWN BY: JDL DESIGNED BY: JDL APPROVED BY: JEO SCALE AS NOTED REV. NO. F DATE 8/03/2023 SH.NO.

File: V:\PROJECTS\ANY\K6\066076.000\09_DESIGN\DRAWINGS\01_SHEETS\DESIGN PACKAGE 4\DESIGN PACKAGE A\066076_4A - C-303_C-303A.DWG Saved: 7/31/2023 2:37:06 PM Plotted: 7/31/2023 2:55:05 PM Current User: Snyder, Morgan LastSavedBy: 8275

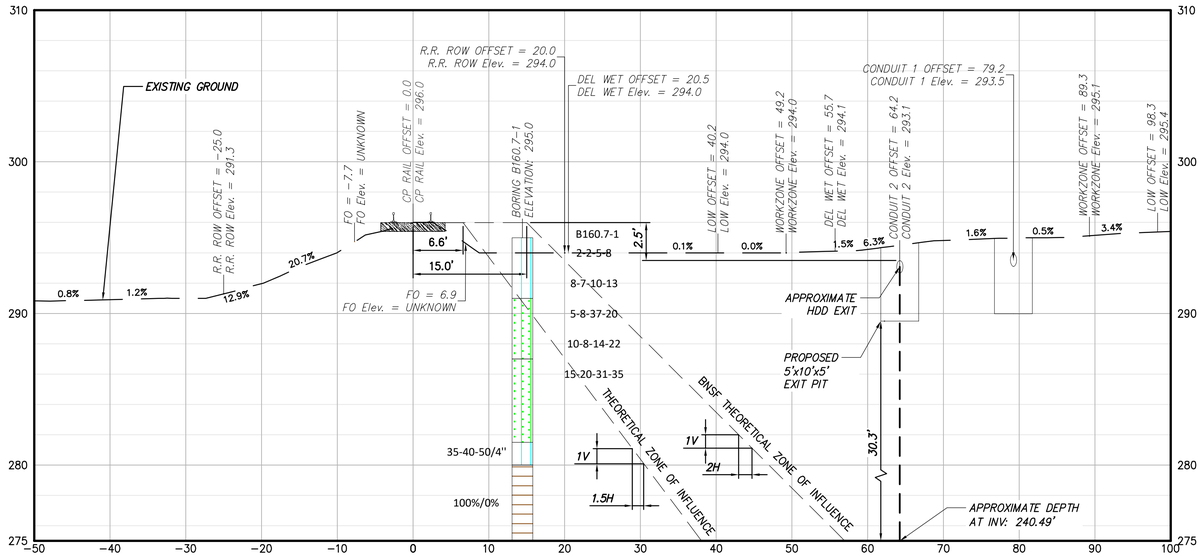

4 HDD 53 CONDUIT 2 EXIT PIT CUT SECTION; STA. 40106+60

CP RAIL CANADIAN MAINLINE MP: 29.52

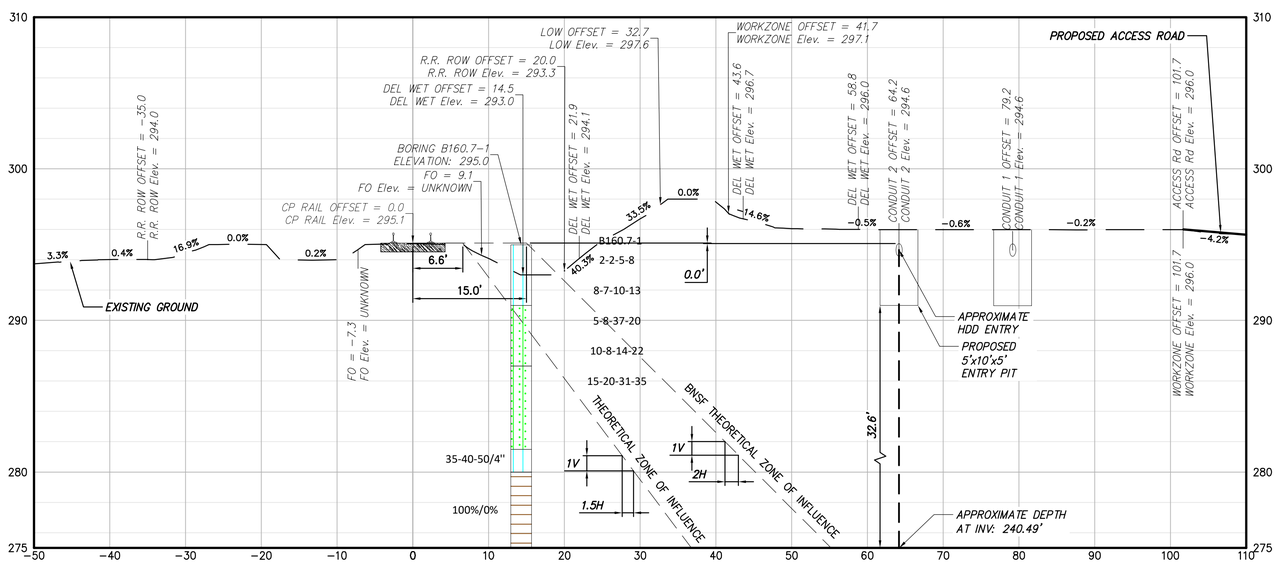

3 HDD 53 CONDUIT 2 ENTRY PIT CUT SECTION; STA. 40098+58

CP RAIL CANADIAN MAINLINE MP: 29.67

BORING LOG STRIP LEGEND

B101

Blow Counts per 6" = 10-10-10

Recovery %/RQD % = 95%/90%

11000psi =UCS

2D strip logs shown at 10x exaggeration

3D strip logs have no exaggeration

Legend	
ASPHALT	Asphalt
Bedrock	Bedrock
Boulder	Boulder
CH	Fat CLAY
CH-MH	SILTY Fat CLAY
CL	Lean CLAY
CL-ML	SILTY CLAY
CONCRETE	Concrete
Fill	Fill
GC	CLAYEY GRAVEL
GC-GM	SILTY CLAYEY GRAVEL
GM	SILTY GRAVEL
GP	Poorly Graded GRAVEL
GP-GC	Poorly Graded Gravel with CLAY
GP-GM	Poorly Graded GRAVEL with SILT
GW	Well Graded GRAVEL
GW-GC	Well Graded GRAVEL with CLAY
GW-GM	Well Graded GRAVEL with SILT
Limestone	Limestone
MH	Elastic SILT
ML	SILT
OH	ORGANIC Fat CLAY
OL	ORGANIC Lean CLAY
OL/OH	ORGANIC SOIL
PT	PEAT
Rock	Rock
Sandstone	Sandstone
SC	CLAYEY SAND
SC-SM	SILT, CLAYEY SAND
SHALE	Shale
SILTSTONE	Siltstone
SM	SILTY SAND
SP	Poorly Graded SAND
SP-SC	Poorly Graded SAND with CLAY
SP-SM	Poorly Graded SAND with SILT
SW	Well graded SAND
SW-SC	Well Graded SAND with CLAY
SW-SM	Well Graded SAND with SILT
Topsoil	Topsoil
USGS 601	Gravel or Conglomerate 1
USGS 654	Subgraywacke
USGS 670	Interbedded Sandstone and Shale
USGS 702	Quartzite
USGS 705	Schist
USGS 705	Schist
USGS 708	Gneiss
USGS 708	Gneiss
USGS 718	Granite 1
Void	Void
Water	Water
Weathered Rock	Undefined
Water Table	Water Table during drilling
Delayed Water Table	Water Table after drilling

0 10 20 Scale in feet

CHPE Champlain Hudson Power Express

Kiewit

CHA
III Winners Circle, PO Box 5269
Albany, NY 12205-0269
518.453.4500 . www.chacompanies.com

STATE OF NEW YORK · JEFFREY O'DONNELL · 087450 · LICENSED PROFESSIONAL ENGINEER

IT IS A VIOLATION OF LAW FOR ANY PERSON, UNLESS THEY ARE ACTING UNDER THE DIRECTION OF A LICENSED PROFESSIONAL ENGINEER, ARCHITECT, LANDSCAPE ARCHITECT OR LAND SURVEYOR TO ALTER AN ITEM IN ANY WAY. IF AN ITEM BEARING THE STAMP OF A LICENSED PROFESSIONAL IS ALTERED, THE ALTERING ENGINEER, ARCHITECT, LANDSCAPE ARCHITECT OR LAND SURVEYOR SHALL STAMP THE DOCUMENT AND INCLUDE THE NOTATION "ALTERED BY" FOLLOWED BY THEIR SIGNATURE, THE DATE OF SUCH ALTERATION, AND A SPECIFIC DESCRIPTION OF THE ALTERATION.

No.	DATE	SUBMITTAL / REVISION DESCRIPTION	DB	APP
0	08/03/2023	ISSUED FOR CONSTRUCTION SUBMISSION	SPB	JEO

CHAMPLAIN HUDSON POWER EXPRESS
SEGMENT 6 (PACKAGE 4A) - CP: BALLSTON TO GLENVILLE
RAIL CROSS SECTION DETAILS HDD 53

KIEWIT PROJECT NO. 21162

CHA PROJECT NO. 066076

DRAWING NO. **C-643.1**

DRAWN BY: JDL DESIGNED BY: JDL APPROVED BY: JEO SCALE AS NOTED REV. NO. F DATE 8/03/2023 SH.NO.

File: V:\PROJECTS\ANY\K6\066076.000\09_DESIGN\DRAWINGS\01_SHEETS\DESIGN PACKAGE 4\DESIGN PACKAGE A\066076_4A - C-303_C-303A.DWG Saved: 7/31/2023 2:37:06 PM Plotted: 7/31/2023 2:55:41 PM Current User: Snyder, Morgan LastSavedBy: 8275

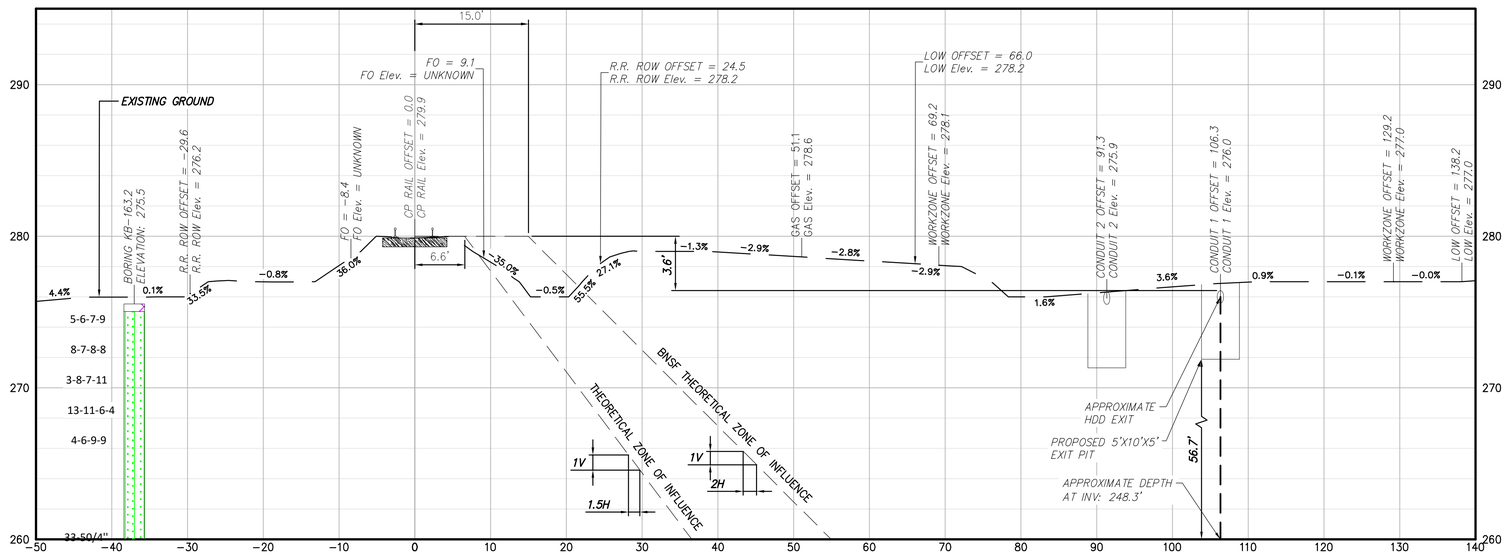

2 HDD 53A CONDUIT 1 EXIT PIT CUT SECTION; STA. 40233+81

CP RAIL CANADIAN MAINLINE MP: 27.15

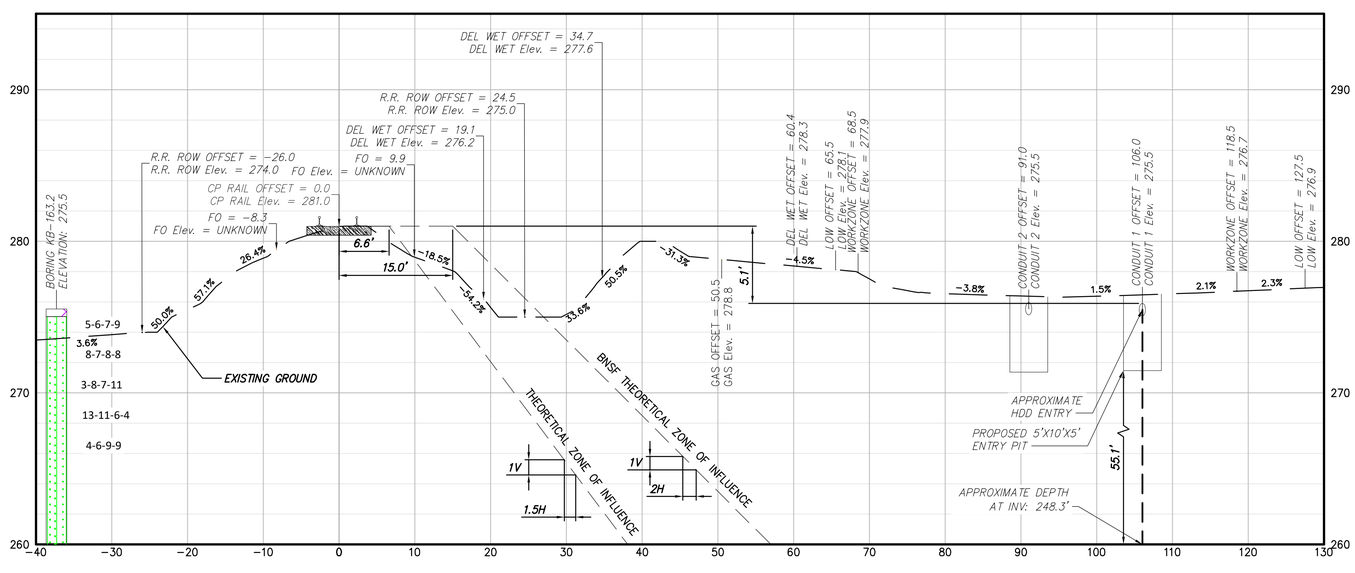

1 HDD 53A CONDUIT 1 ENTRY PIT CUT SECTION; STA. 40227+65

CP RAIL CANADIAN MAINLINE MP: 27.27

BORING LOG STRIP LEGEND

B101

Blow Counts per 6" = 10-10-10

Recovery %/RQD % = 95%/90%

11000psi =UCS

2D strip logs shown at 10x exaggeration

3D strip logs have no exaggeration

Legend	
ASPHALT	Asphalt
Bedrock	Bedrock
Boulder	Boulder
CH	Fat CLAY
CH-MH	SILTY Fat CLAY
CL	Lean CLAY
CL-ML	SILTY CLAY
CONCRETE	Concrete
Fill	Fill
GC	CLAYEY GRAVEL
GC-GM	SILTY CLAYEY GRAVEL
GM	SILTY GRAVEL
GP	Poorly Graded GRAVEL
GP-GC	Poorly Graded Gravel with CLAY
GP-GM	Poorly Graded GRAVEL with SILT
GW	Well Graded GRAVEL
GW-GC	Well Graded GRAVEL with CLAY
GW-GM	Well Graded GRAVEL with SILT
Limestone	Limestone
MH	Elastic SILT
ML	SILT
OH	ORGANIC Fat CLAY
OL	ORGANIC Lean CLAY
OL/OH	ORGANIC SOIL
PT	PEAT
Rock	Rock
Sandstone	Sandstone
SC	CLAYEY SAND
SC-SM	SILT, CLAYEY SAND
SHALE	Shale
SILTSTONE	Siltstone
SM	SILTY SAND
SP	Poorly Graded SAND
SP-SC	Poorly Graded SAND with CLAY
SP-SM	Poorly Graded SAND with SILT
SW	Well graded SAND
SW-SC	Well Graded SAND with CLAY
SW-SM	Well Graded SAND with SILT
Topsoil	Topsoil
USGS 601	Gravel or Conglomerate 1
USGS 654	Subgraywacke
USGS 670	Interbedded Sandstone and Shale
USGS 702	Quartzite
USGS 705	Schist
USGS 705	Schist
USGS 708	Gneiss
USGS 708	Gneiss
USGS 718	Granite 1
Void	Void
Water	Water
Weathered Rock	Undefined
Water Table	Water Table during drilling
Delayed Water Table	Water Table after drilling

0 10 20 Scale in feet

CHPE Champlain Hudson Power Express

Kiewit

CHA
III Winners Circle, PO Box 5269
Albany, NY 12205-0269
518.453.4500 . www.chacompanies.com

STATE OF NEW YORK · JEFFREY O'DONNELL · 087450 · LICENSED PROFESSIONAL ENGINEER

IT IS A VIOLATION OF LAW FOR ANY PERSON, UNLESS THEY ARE ACTING UNDER THE DIRECTION OF A LICENSED PROFESSIONAL ENGINEER, ARCHITECT, LANDSCAPE ARCHITECT OR LAND SURVEYOR TO ALTER AN ITEM IN ANY WAY. IF AN ITEM BEARING THE STAMP OF A LICENSED PROFESSIONAL IS ALTERED, THE ALTERING ENGINEER, ARCHITECT, LANDSCAPE ARCHITECT OR LAND SURVEYOR SHALL STAMP THE DOCUMENT AND INCLUDE THE NOTATION "ALTERED BY" FOLLOWED BY THEIR SIGNATURE, THE DATE OF SUCH ALTERATION, AND A SPECIFIC DESCRIPTION OF THE ALTERATION.

No.	DATE	SUBMITTAL / REVISION DESCRIPTION	DB	APP
0	08/03/2023	ISSUED FOR CONSTRUCTION SUBMISSION	SPB	JEO

CHAMPLAIN HUDSON POWER EXPRESS
SEGMENT 6 (PACKAGE 4A) - CP: BALLSTON TO GLENVILLE
RAIL CROSS SECTION DETAILS HDD 53A

KIEWIT PROJECT NO. 21162

CHA PROJECT NO. 066076

DRAWING NO. C-644

DRAWN BY: ES | DESIGNED BY: ES | APPROVED BY: JEO | SCALE AS NOTED | REV. NO. F | DATE 8/03/2023 | SH.NO.

File: V:\PROJECTS\ANY\K6\066076.000\09_DESIGN\DRAWINGS\01_SHEETS\DESIGN PACKAGE 4\DESIGN PACKAGE 4\066076_4A - C-304_C-304A.DWG Saved: 8/1/2023 4:01:26 PM Plotted: 8/1/2023 4:07:22 PM Current User: Snyder, Morgan LastSavedBy: 6043

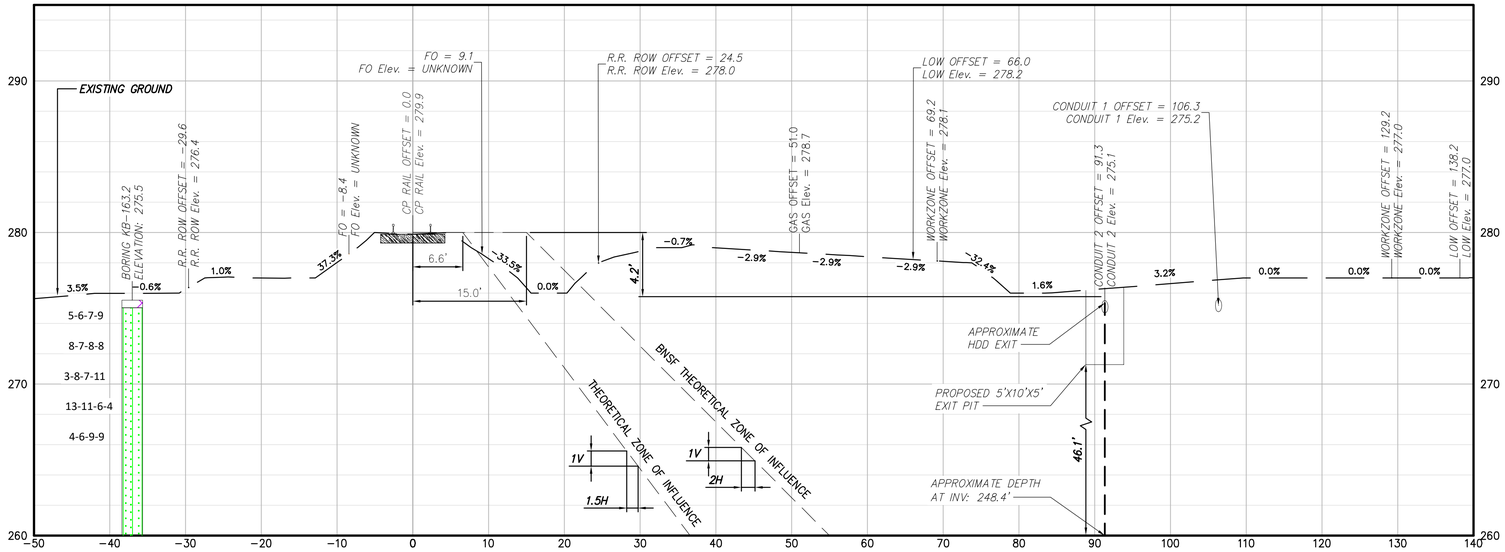

4 HDD 53A CONDUIT 2 EXIT PIT CUT SECTION; STA. 40233+76

CP RAIL CANADIAN MAINLINE MP: 27.15

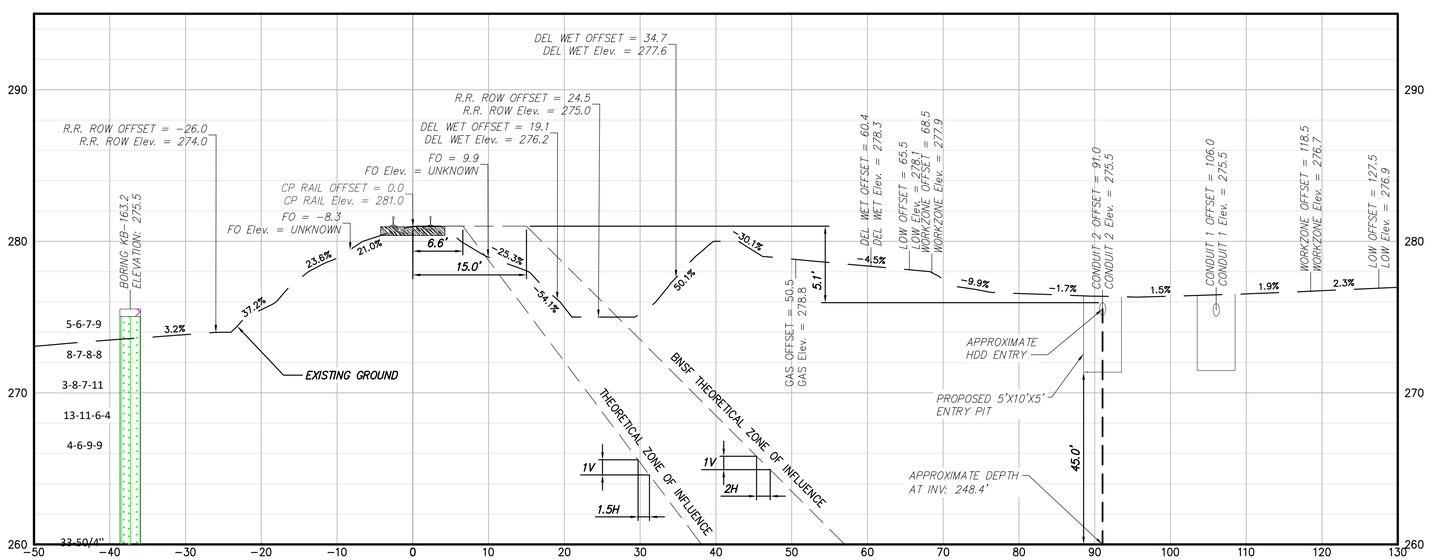

3 HDD 53A CONDUIT 2 ENTRY PIT CUT SECTION; STA. 40227+65

CP RAIL CANADIAN MAINLINE MP: 27.27

BORING LOG STRIP LEGEND

B101

Blow Counts per 6" = 10-10-10

Recovery %/RQD % = 95%/90%

11000psi =UCS

2D strip logs shown at 10x exaggeration

3D strip logs have no exaggeration

Legend	
ASPHALT	Asphalt
Bedrock	Bedrock
Boulder	Boulder
CH	Fat CLAY
CH-MH	SILTY Fat CLAY
CL	Lean CLAY
CL-ML	SILTY CLAY
CONCRETE	Concrete
Fill	Fill
GC	CLAYEY GRAVEL
GC-GM	SILTY CLAYEY GRAVEL
GM	SILTY GRAVEL
GP	Poorly Graded GRAVEL
GP-GC	Poorly Graded Gravel with CLAY
GP-GM	Poorly Graded GRAVEL with SILT
GW	Well Graded GRAVEL
GW-GC	Well Graded GRAVEL with CLAY
GW-GM	Well Graded GRAVEL with SILT
Limestone	Limestone
MH	Elastic SILT
ML	SILT
OH	ORGANIC Fat CLAY
OL	ORGANIC Lean CLAY
OL/OH	ORGANIC SOIL
PT	PEAT
Rock	Rock
Sandstone	Sandstone
SC	CLAYEY SAND
SC-SM	SILT, CLAYEY SAND
SHALE	Shale
SILTSTONE	Siltstone
SM	SILTY SAND
SP	Poorly Graded SAND
SP-SC	Poorly Graded SAND with CLAY
SP-SM	Poorly Graded SAND with SILT
SW	Well graded SAND
SW-SC	Well Graded SAND with CLAY
SW-SM	Well Graded SAND with SILT
Topsoil	Topsoil
USGS 601	Gravel or Conglomerate 1
USGS 654	Subgraywacke
USGS 670	Interbedded Sandstone and Shale
USGS 702	Quartzite
USGS 705	Schist
USGS 705	Schist
USGS 708	Gneiss
USGS 708	Gneiss
USGS 718	Granite 1
Void	Void
Water	Water
Weathered Rock	Undefined
Water Table	Water Table during drilling
Delayed Water Table	Water Table after drilling

0 10 20 Scale in feet

CHPE Champlain Hudson Power Express

Kiewit

CHA
III Winners Circle, PO Box 5269
Albany, NY 12205-0269
518.453.4500 . www.chacompanies.com

STATE OF NEW YORK · JEFFREY O'DONNELL · 087450 · LICENSED PROFESSIONAL ENGINEER

IT IS A VIOLATION OF LAW FOR ANY PERSON, UNLESS THEY ARE ACTING UNDER THE DIRECTION OF A LICENSED PROFESSIONAL ENGINEER, ARCHITECT, LANDSCAPE ARCHITECT OR LAND SURVEYOR TO ALTER AN ITEM IN ANY WAY. IF AN ITEM BEARING THE STAMP OF A LICENSED PROFESSIONAL IS ALTERED, THE ALTERING ENGINEER, ARCHITECT, LANDSCAPE ARCHITECT OR LAND SURVEYOR SHALL STAMP THE DOCUMENT AND INCLUDE THE NOTATION "ALTERED BY" FOLLOWED BY THEIR SIGNATURE, THE DATE OF SUCH ALTERATION, AND A SPECIFIC DESCRIPTION OF THE ALTERATION.

No.	DATE	SUBMITTAL / REVISION DESCRIPTION	DB	APP
0	08/03/2023	ISSUED FOR CONSTRUCTION SUBMISSION	SPB	JEO

CHAMPLAIN HUDSON POWER EXPRESS
SEGMENT 6 (PACKAGE 4A) - CP: BALLSTON TO GLENVILLE
RAIL CROSS SECTION DETAILS HDD 53A

DRAWN BY: ES DESIGNED BY: ES APPROVED BY: JEO SCALE AS NOTED REV. NO. F

KIEWIT PROJECT NO. 21162
CHA PROJECT NO. 066076
DRAWING NO. C-644.1
DATE 8/03/2023
SH.NO.

File: V:\PROJECTS\ANY\K6\066076.000\09_DESIGN\DRAWINGS\01_SHEETS\DESIGN PACKAGE 4\DESIGN PACKAGE A\066076_4A - C-304_C-304A.DWG Saved: 7/31/2023 2:34:46 PM Plotted: 7/31/2023 2:58:24 PM Current User: Snyder, Morgan LastSavedBy: 7894

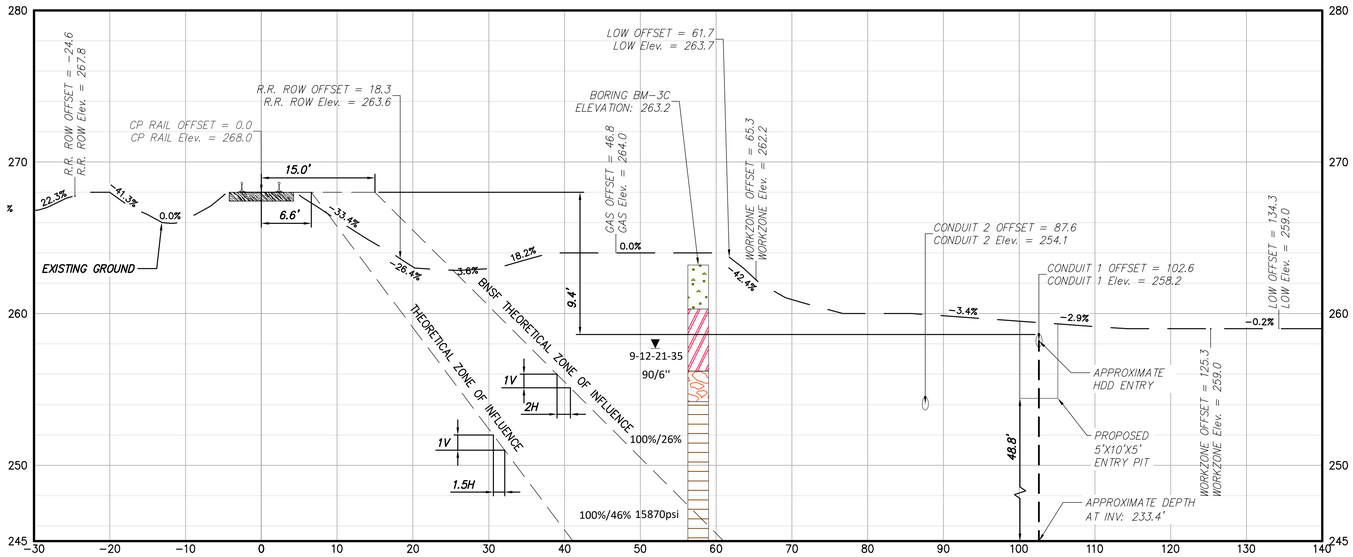

2 HDD 59 CONDUIT 1 ENTRY PIT CUT SECTION; STA. 40420+28

CP RAIL CANADIAN MAINLINE MP: 23.59

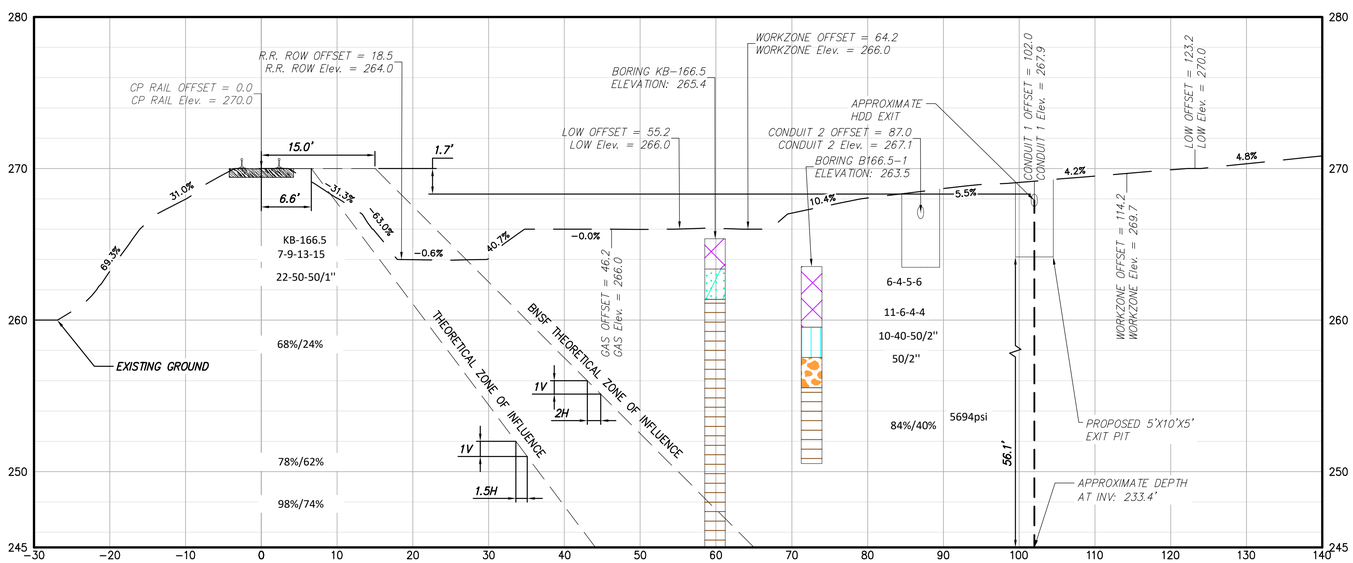

1 HDD 59 CONDUIT 1 EXIT PIT CUT SECTION; STA. 40409+21

CP RAIL CANADIAN MAINLINE MP: 23.80

BORING LOG STRIP LEGEND

B101

Blow Counts per 6" = 10-10-10

Recovery %/RQD % = 95%/90%

11000psi =UCS

2D strip logs shown at 10x exaggeration

3D strip logs have no exaggeration

Legend	
ASPHALT	Asphalt
Bedrock	Bedrock
Boulder	Boulder
CH	Fat CLAY
CH-MH	SILTY Fat CLAY
CL	Lean CLAY
CL-ML	SILTY CLAY
CONCRETE	Concrete
Fill	Fill
GC	CLAYEY GRAVEL
GC-GM	SILTY CLAYEY GRAVEL
GM	SILTY GRAVEL
GP	Poorly Graded GRAVEL
GP-GC	Poorly Graded Gravel with CLAY
GP-GM	Poorly Graded GRAVEL with SILT
GW	Well Graded GRAVEL
GW-GC	Well Graded GRAVEL with CLAY
GW-GM	Well Graded GRAVEL with SILT
Limestone	Limestone
MH	Elastic SILT
ML	SILT
OH	ORGANIC Fat CLAY
OL	ORGANIC Lean CLAY
OL/OH	ORGANIC SOIL
PT	PEAT
Rock	Rock
Sandstone	Sandstone
SC	CLAYEY SAND
SC-SM	SILT, CLAYEY SAND
SHALE	Shale
SILTSTONE	Siltstone
SM	SILTY SAND
SP	Poorly Graded SAND
SP-SC	Poorly Graded SAND with CLAY
SP-SM	Poorly Graded SAND with SILT
SW	Well graded SAND
SW-SC	Well Graded SAND with CLAY
SW-SM	Well Graded SAND with SILT
Topsoil	Topsoil
USGS 601	Gravel or Conglomerate 1
USGS 654	Subgraywacke
USGS 670	Interbedded Sandstone and Shale
USGS 702	Quartzite
USGS 705	Schist
USGS 705	Schist
USGS 708	Gneiss
USGS 708	Gneiss
USGS 718	Granite 1
Void	Void
Water	Water
Weathered Rock	Undefined
Water Table	Water Table during drilling
Delayed Water Table	Water Table after drilling

0 10 20 Scale in feet

CHPE Champlain Hudson Power Express

Kiewit

CHA
III Winners Circle, PO Box 5269
Albany, NY 12205-0269
518.453.4500 . www.chacompanies.com

STATE OF NEW YORK · JEFFREY O'DONNELL · 087450 · LICENSED PROFESSIONAL ENGINEER

IT IS A VIOLATION OF LAW FOR ANY PERSON, UNLESS THEY ARE ACTING UNDER THE DIRECTION OF A LICENSED PROFESSIONAL ENGINEER, ARCHITECT, LANDSCAPE ARCHITECT OR LAND SURVEYOR TO ALTER AN ITEM IN ANY WAY. IF AN ITEM BEARING THE STAMP OF A LICENSED PROFESSIONAL IS ALTERED, THE ALTERING ENGINEER, ARCHITECT, LANDSCAPE ARCHITECT OR LAND SURVEYOR SHALL STAMP THE DOCUMENT AND INCLUDE THE NOTATION "ALTERED BY" FOLLOWED BY THEIR SIGNATURE, THE DATE OF SUCH ALTERATION, AND A SPECIFIC DESCRIPTION OF THE ALTERATION.

No.	DATE	SUBMITTAL / REVISION DESCRIPTION	DB	APP
0	08/03/2023	ISSUED FOR CONSTRUCTION SUBMISSION	SPB	JEO

CHAMPLAIN HUDSON POWER EXPRESS
SEGMENT 6 (PACKAGE 4A) - CP: BALLSTON TO GLENVILLE
RAIL CROSS SECTION DETAILS HDD 59

DRAWN BY: JDL DESIGNED BY: JDL APPROVED BY: JEO

SCALE AS NOTED REV. NO. F

KIEWIT PROJECT NO. 21162

CHA PROJECT NO. 066076

DRAWING NO. C-645

DATE 8/03/2023 SH.NO.

File: V:\PROJECTS\ANY\K6\066076.000\09_DESIGN\DRAWINGS\01_SHEETS\DESIGN PACKAGE 4\DESIGN PACKAGE A\066076_4A - C-305_C-305A1.DWG Saved: 8/1/2023 3:25:32 PM Plotted: 8/1/2023 5:37:54 PM Current User: Snyder, Morgan LastSavedBy: 6043

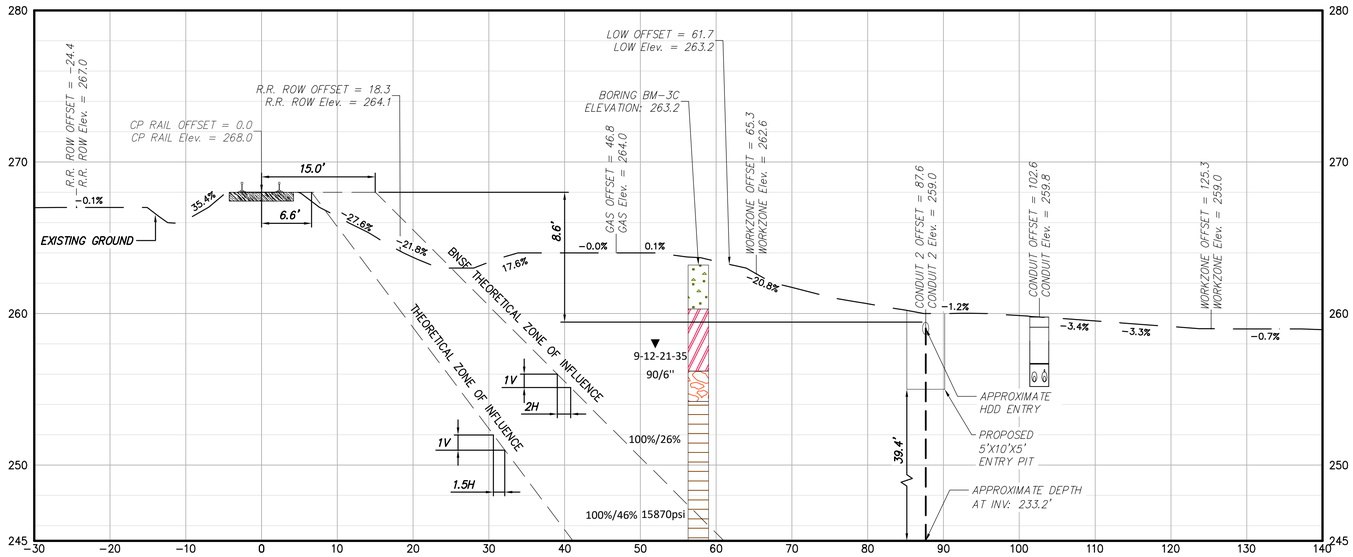

4 HDD 59 CONDUIT 2 ENTRY PIT CUT SECTION; STA. 40420+63

CP RAIL CANADIAN MAINLINE MP: 23.58

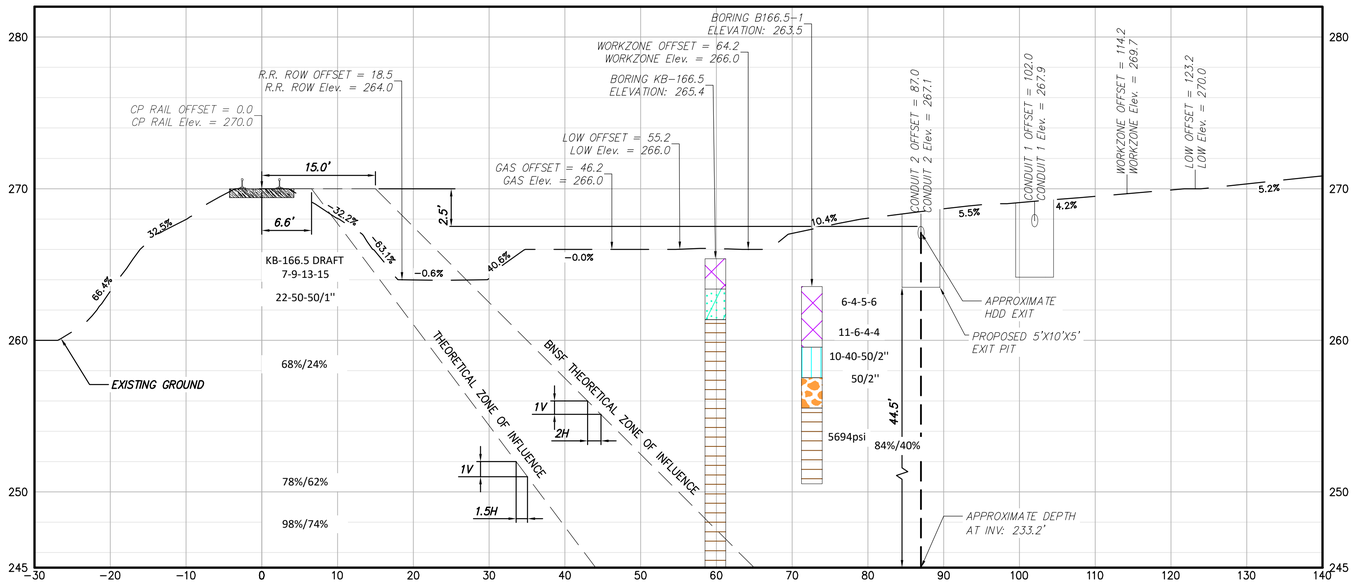

3 HDD 59 CONDUIT 2 EXIT PIT CUT SECTION; STA. 40409+21

CP RAIL CANADIAN MAINLINE MP: 23.80

BORING LOG STRIP LEGEND

B101

Blow Counts per 6" = 10-10-10

Recovery %/RQD % = 95%/90%

11000psi =UCS

2D strip logs shown at 10x exaggeration

3D strip logs have no exaggeration

Legend	
ASPHALT	Asphalt
Bedrock	Bedrock
Boulder	Boulder
CH	Fat CLAY
CH-MH	SILTY Fat CLAY
CL	Lean CLAY
CL-ML	SILTY CLAY
CONCRETE	Concrete
Fill	Fill
GC	CLAYEY GRAVEL
GC-GM	SILTY CLAYEY GRAVEL
GM	SILTY GRAVEL
GP	Poorly Graded GRAVEL
GP-GC	Poorly Graded Gravel with CLAY
GP-GM	Poorly Graded GRAVEL with SILT
GW	Well Graded GRAVEL
GW-GC	Well Graded GRAVEL with CLAY
GW-GM	Well Graded GRAVEL with SILT
Limestone	Limestone
MH	Elastic SILT
ML	SILT
OH	ORGANIC Fat CLAY
OL	ORGANIC Lean CLAY
OL/OH	ORGANIC SOIL
PT	PEAT
Rock	Rock
Sandstone	Sandstone
SC	CLAYEY SAND
SC-SM	SILT, CLAYEY SAND
SHALE	Shale
SILTSTONE	Siltstone
SM	SILTY SAND
SP	Poorly Graded SAND
SP-SC	Poorly Graded SAND with CLAY
SP-SM	Poorly Graded SAND with SILT
SW	Well graded SAND
SW-SC	Well Graded SAND with CLAY
SW-SM	Well Graded SAND with SILT
Topsoil	Topsoil
USGS 601	Gravel or Conglomerate 1
USGS 654	Subgraywacke
USGS 670	Interbedded Sandstone and Shale
USGS 702	Quartzite
USGS 705	Schist
USGS 705	Schist
USGS 708	Gneiss
USGS 708	Gneiss
USGS 718	Granite 1
Void	Void
Water	Water
Weathered Rock	Undefined
Water Table	Water Table during drilling
Delayed Water Table	Water Table after drilling

0 10 20 Scale in feet

CHPE Champlain Hudson Power Express

Kiewit

CHA
III Winners Circle, PO Box 5269
Albany, NY 12205-0269
518.453.4500 . www.chacompanies.com

STATE OF NEW YORK · JEFFREY O'DONNELL · 087450 · LICENSED PROFESSIONAL ENGINEER

IT IS A VIOLATION OF LAW FOR ANY PERSON, UNLESS THEY ARE ACTING UNDER THE DIRECTION OF A LICENSED PROFESSIONAL ENGINEER, ARCHITECT, LANDSCAPE ARCHITECT OR LAND SURVEYOR TO ALTER AN ITEM IN ANY WAY. IF AN ITEM BEARING THE STAMP OF A LICENSED PROFESSIONAL IS ALTERED, THE ALTERING ENGINEER, ARCHITECT, LANDSCAPE ARCHITECT OR LAND SURVEYOR SHALL STAMP THE DOCUMENT AND INCLUDE THE NOTATION "ALTERED BY" FOLLOWED BY THEIR SIGNATURE, THE DATE OF SUCH ALTERATION, AND A SPECIFIC DESCRIPTION OF THE ALTERATION.

No.	DATE	SUBMITTAL / REVISION DESCRIPTION	DB	APP
0	08/03/2023	ISSUED FOR CONSTRUCTION SUBMISSION	SPB	JEO

CHAMPLAIN HUDSON POWER EXPRESS
SEGMENT 6 (PACKAGE 4A) - CP: BALLSTON TO GLENVILLE
RAIL CROSS SECTION DETAILS HDD 59

DRAWN BY: JDL DESIGNED BY: JDL APPROVED BY: JEO

SCALE AS NOTED REV. NO. F

KIEWIT PROJECT NO. 21162

CHA PROJECT NO. 066076

DRAWING NO. C-645.1

DATE 8/03/2023 SH.NO.

File: V:\PROJECTS\ANY\K6\066076.000\09_DESIGN\DRAWINGS\01_SHEETS\DESIGN PACKAGE 4\DESIGN PACKAGE A\066076_4A - C-305_C-305A1.DWG Saved: 8/1/2023 3:25:32 PM Plotted: 8/1/2023 5:38:34 PM Current User: Snyder, Morgan LastSavedBy: 6043

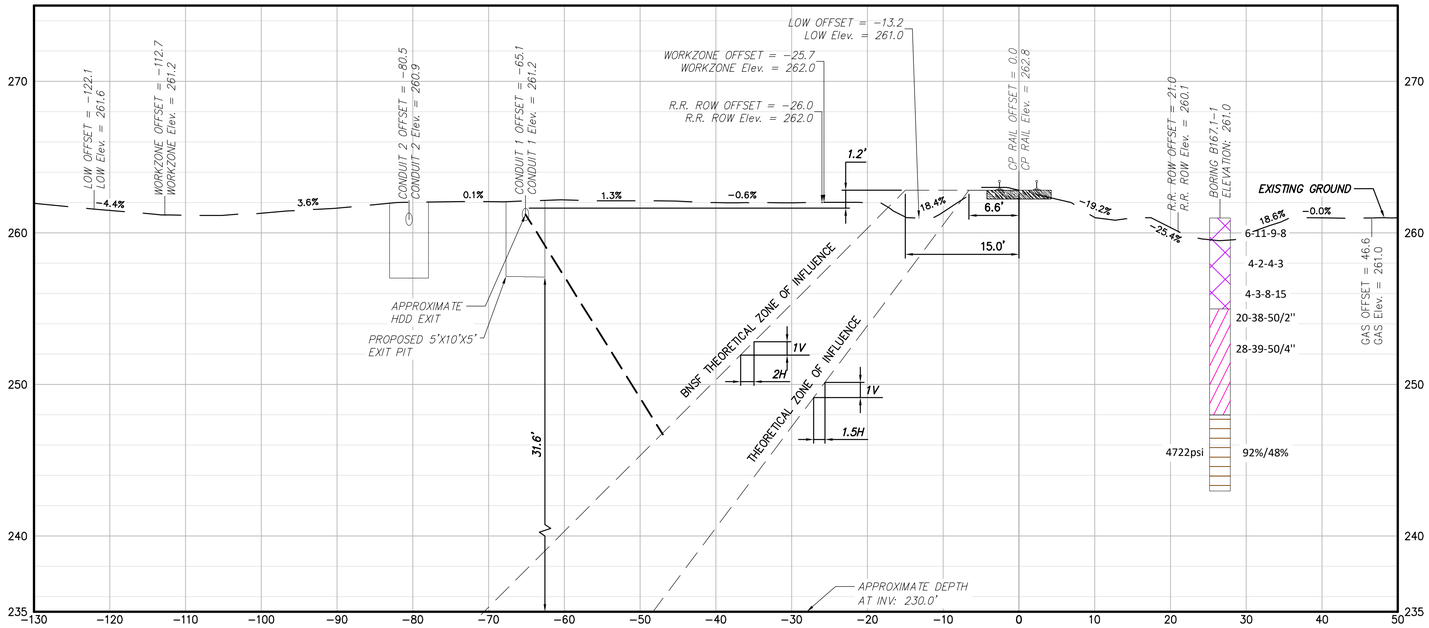

2 HDD 59A CONDUIT 1 EXIT PIT CUT SECTION; STA. 40443+58

CP RAIL CANADIAN MAINLINE MP: 23.17

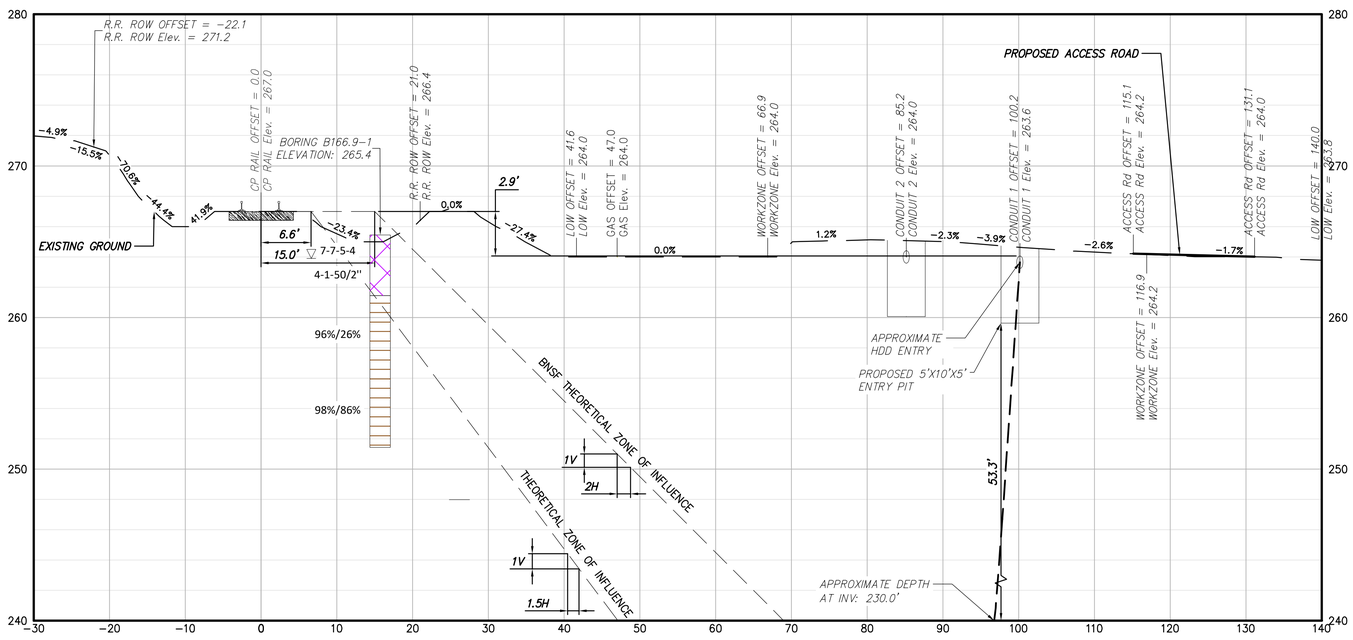

1 HDD 59A CONDUIT 1 ENTRY PIT CUT SECTION; STA. 40425+47

CP RAIL CANADIAN MAINLINE MP: 23.50

BORING LOG STRIP LEGEND

B101

Blow Counts per 6" = 10-10-10

Recovery %/RQD % = 95%/90%

11000psi =UCS

2D strip logs shown at 10x exaggeration

3D strip logs have no exaggeration

Legend	
ASPHALT	Asphalt
Bedrock	Bedrock
Boulder	Boulder
CH	Fat CLAY
CH-MH	SILTY Fat CLAY
CL	Lean CLAY
CL-ML	SILTY CLAY
CONCRETE	Concrete
Fill	Fill
GC	CLAYEY GRAVEL
GC-GM	SILTY CLAYEY GRAVEL
GM	SILTY GRAVEL
GP	Poorly Graded GRAVEL
GP-GC	Poorly Graded Gravel with CLAY
GP-GM	Poorly Graded GRAVEL with SILT
GW	Well Graded GRAVEL
GW-GC	Well Graded GRAVEL with CLAY
GW-GM	Well Graded GRAVEL with SILT
Limestone	Limestone
MH	Elastic SILT
ML	SILT
OH	ORGANIC Fat CLAY
OL	ORGANIC Lean CLAY
OL/OH	ORGANIC SOIL
PT	PEAT
Rock	Rock
Sandstone	Sandstone
SC	CLAYEY SAND
SC-SM	SILT, CLAYEY SAND
SHALE	Shale
SILTSTONE	Siltstone
SM	SILTY SAND
SP	Poorly Graded SAND
SP-SC	Poorly Graded SAND with CLAY
SP-SM	Poorly Graded SAND with SILT
SW	Well graded SAND
SW-SC	Well Graded SAND with CLAY
SW-SM	Well Graded SAND with SILT
Topsoil	Topsoil
USGS 601	Gravel or Conglomerate I
USGS 654	Subgraywacke
USGS 670	Interbedded Sandstone and Shale
USGS 702	Quartzite
USGS 705	Schist
USGS 705	Schist
USGS 708	Gneiss
USGS 708	Gneiss
USGS 718	Granite I
Void	Void
Water	Water
Weathered Rock	Undefined
Water Table	Water Table during drilling
Delayed Water Table	Water Table after drilling

0 10 20 Scale in feet

CHPE Champlain Hudson Power Express

Kiewit

CHA
III Winners Circle, PO Box 5269
Albany, NY 12205-0269
518.453.4500 . www.chacompanies.com

STATE OF NEW YORK · JEREY O'DONNELL · 087450 · LICENSED PROFESSIONAL ENGINEER

IT IS A VIOLATION OF LAW FOR ANY PERSON, UNLESS THEY ARE ACTING UNDER THE DIRECTION OF A LICENSED PROFESSIONAL ENGINEER, ARCHITECT, LANDSCAPE ARCHITECT OR LAND SURVEYOR TO ALTER AN ITEM IN ANY WAY. IF AN ITEM BEARING THE STAMP OF A LICENSED PROFESSIONAL IS ALTERED, THE ALTERING ENGINEER, ARCHITECT, LANDSCAPE ARCHITECT OR LAND SURVEYOR SHALL STAMP THE DOCUMENT AND INCLUDE THE NOTATION "ALTERED BY" FOLLOWED BY THEIR SIGNATURE, THE DATE OF SUCH ALTERATION, AND A SPECIFIC DESCRIPTION OF THE ALTERATION.

No.	DATE	SUBMITTAL / REVISION DESCRIPTION	DB	APP
0	08/03/2023	ISSUED FOR CONSTRUCTION SUBMISSION	SPB	JEO

CHAMPLAIN HUDSON POWER EXPRESS
SEGMENT 6 (PACKAGE 4A) - CP: BALLSTON TO GLENVILLE
RAIL CROSS SECTION DETAILS HDD 59A

KIEWIT PROJECT NO. 21162

CHA PROJECT NO. 066076

DRAWING NO. **C-646**

DRAWN BY: ES | DESIGNED BY: ES | APPROVED BY: JEO | SCALE AS NOTED | REV. NO. F | DATE 8/03/2023 | SH.NO.

File: V:\PROJECTS\ANY\K6\066076.000\09_DESIGN\DRAWINGS\01_SHEETS\DESIGN PACKAGE 4\DESIGN PACKAGE 4\066076_4A - C-306_C-306A.DWG Saved: 8/1/2023 5:28:26 PM Plotted: 8/1/2023 5:31:56 PM Current User: Snyder, Morgan LastSavedBy: 6043

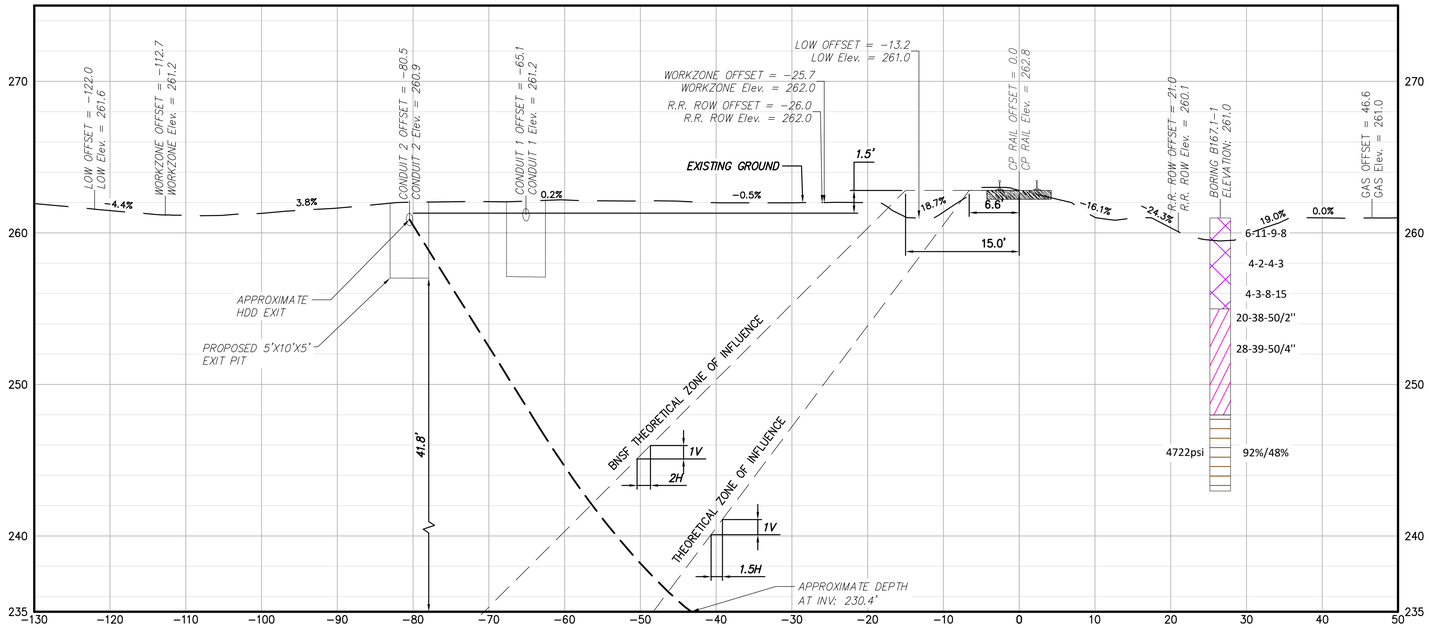

4 HDD 59A CONDUIT 2 EXIT PIT CUT SECTION; STA. 40443+61

CP RAIL CANADIAN MAINLINE MP: 23.17

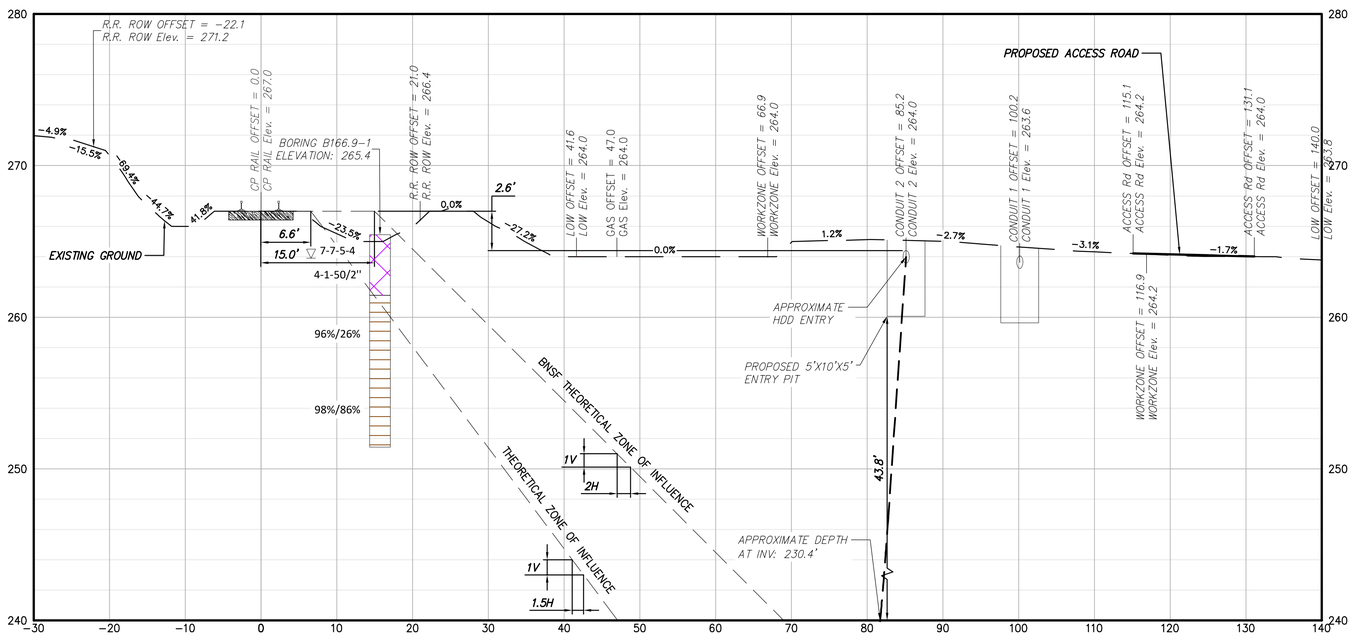

3 HDD 59A CONDUIT 2 ENTRY PIT CUT SECTION; STA. 40425+48

CP RAIL CANADIAN MAINLINE MP: 23.50

BORING LOG STRIP LEGEND

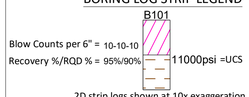

2D strip logs shown at 10x exaggeration
3D strip logs have no exaggeration

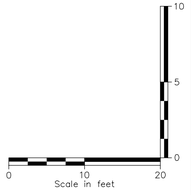

Legend		
	ASPHALT	Asphalt
	Bedrock	Bedrock
	Boulder	Boulder
	CH	Fat CLAY
	CH-MH	SILTY Fat CLAY
	CL	Lean CLAY
	CL-ML	SILTY CLAY
	CONCRETE	Concrete
	Fill	Fill
	GC	CLAYEY GRAVEL
	GC-GM	SILTY CLAYEY GRAVEL
	GM	SILTY GRAVEL
	GP	Poorly Graded GRAVEL
	GP-GC	Poorly Graded Gravel with CLAY
	GP-GM	Poorly Graded GRAVEL with SILT
	GW	Well Graded GRAVEL
	GW-GC	Well Graded GRAVEL with CLAY
	GW-GM	Well Graded GRAVEL with SILT
	Limestone	Limestone
	MH	Elastic SILT
	ML	SILT
	OH	ORGANIC Fat CLAY
	OL	ORGANIC Lean CLAY
	OL/OH	ORGANIC SOIL
	PT	PEAT
	Rock	Rock
	Sandstone	Sandstone
	SC	CLAYEY SAND
	SC-SM	SILT, CLAYEY SAND
	SHALE	Shale
	SILTSTONE	Siltstone
	SM	SILTY SAND
	SP	Poorly Graded SAND
	SP-SC	Poorly Graded SAND with CLAY
	SP-SM	Poorly Graded SAND with SILT
	SW	Well graded SAND
	SW-SC	Well Graded SAND with CLAY
	SW-SM	Well Graded SAND with SILT
	Topsoil	Topsoil
	USGS 601	Gravel or Conglomerate I
	USGS 654	Subgraywacke
	USGS 670	Interbedded Sandstone and Shale
	USGS 702	Quartzite
	USGS 705	Schist
	USGS 705	Schist
	USGS 708	Gneiss
	USGS 708	Gneiss
	USGS 718	Granite I
	Void	Void
	Water	Water
	Weathered Rock	Undefined
▼	Water Table	Water Table during drilling
▽	Delayed Water Table	Water Table after drilling

CHPE Champlain Hudson Power Express

Kiewit

CHA
III Winners Circle, PO Box 5269
Albany, NY 12205-0269
518.453.4500 . www.chacompanies.com

STATE OF NEW YORK · JEFFREY O'DONNELL · 087450 · LICENSED PROFESSIONAL ENGINEER

IT IS A VIOLATION OF LAW FOR ANY PERSON, UNLESS THEY ARE ACTING UNDER THE DIRECTION OF A LICENSED PROFESSIONAL ENGINEER, ARCHITECT, LANDSCAPE ARCHITECT OR LAND SURVEYOR TO ALTER AN ITEM IN ANY WAY. IF AN ITEM BEARING THE STAMP OF A LICENSED PROFESSIONAL IS ALTERED, THE ALTERING ENGINEER, ARCHITECT, LANDSCAPE ARCHITECT OR LAND SURVEYOR SHALL STAMP THE DOCUMENT AND INCLUDE THE NOTATION "ALTERED BY" FOLLOWED BY THEIR SIGNATURE, THE DATE OF SUCH ALTERATION, AND A SPECIFIC DESCRIPTION OF THE ALTERATION.

No.	DATE	SUBMITTAL / REVISION DESCRIPTION	DB	APP
0	08/03/2023	ISSUED FOR CONSTRUCTION SUBMISSION	SPB	JEO

CHAMPLAIN HUDSON POWER EXPRESS
SEGMENT 6 (PACKAGE 4A) - CP: BALLSTON TO GLENVILLE
RAIL CROSS SECTION DETAILS HDD 59A

KIEWIT PROJECT NO. 21162
CHA PROJECT NO. 066076
DRAWING NO. **C-646.1**

DRAWN BY: ES | DESIGNED BY: ES | APPROVED BY: JEO | SCALE AS NOTED | REV. NO. F | DATE 8/03/2023 | SH.NO.

File: V:\PROJECTS\ANY\K6\066076.000\09_DESIGN\DRAWINGS\01_SHEETS\DESIGN PACKAGE 4\DESIGN PACKAGE 4\066076_4A - C-306_C-306A.DWG Saved: 8/1/2023 5:28:26 PM Plotted: 8/1/2023 5:32:36 PM Current User: Snyder, Morgan LastSavedBy: 6043

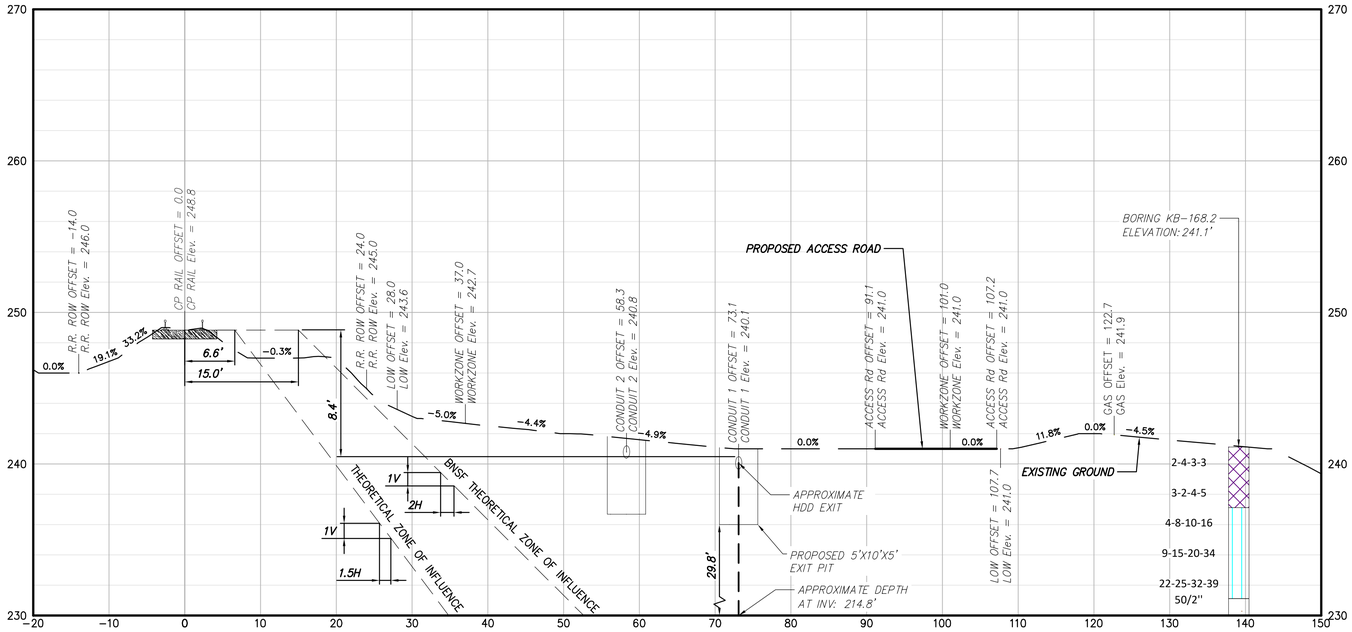

2 HDD 59B CONDUIT 1 EXIT PIT CUT SECTION; STA. 40498+09

CP RAIL CANADIAN MAINLINE MP: 22.12

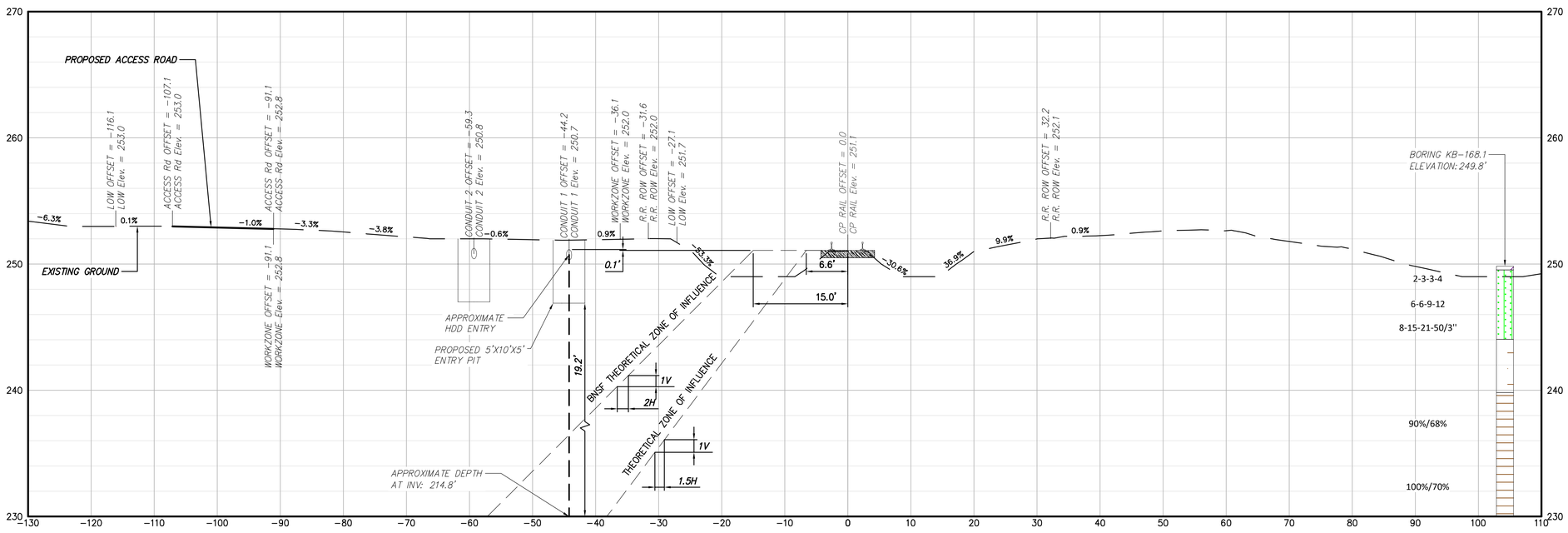

1 HDD 59B CONDUIT 1 ENTRY PIT CUT SECTION; STA. 40489+92

CP RAIL CANADIAN MAINLINE MP: 22.27

BORING LOG STRIP LEGEND

B101

Blow Counts per 6" = 10-10-10

Recovery %/RQD % = 95%/90%

11000psi =UCS

2D strip logs shown at 10x exaggeration

3D strip logs have no exaggeration

Scale in feet: 0, 10, 20

Legend	
ASPHALT	Asphalt
Bedrock	Bedrock
Boulder	Boulder
CH	Fat CLAY
CH-MH	SILTY Fat CLAY
CL	Lean CLAY
CL-ML	SILTY CLAY
CONCRETE	Concrete
Fill	Fill
GC	CLAYEY GRAVEL
GC-GM	SILTY CLAYEY GRAVEL
GM	SILTY GRAVEL
GP	Poorly Graded GRAVEL
GP-GC	Poorly Graded Gravel with CLAY
GP-GM	Poorly Graded GRAVEL with SILT
GW	Well Graded GRAVEL
GW-GC	Well Graded GRAVEL with CLAY
GW-GM	Well Graded GRAVEL with SILT
Limestone	Limestone
MH	Elastic SILT
ML	SILT
OH	ORGANIC Fat CLAY
OL	ORGANIC Lean CLAY
OL/OH	ORGANIC SOIL
PT	PEAT
Rock	Rock
Sandstone	Sandstone
SC	CLAYEY SAND
SC-SM	SILT, CLAYEY SAND
SHALE	Shale
SILTSTONE	Siltstone
SM	SILTY SAND
SP	Poorly Graded SAND
SP-SC	Poorly Graded SAND with CLAY
SP-SM	Poorly Graded SAND with SILT
SW	Well graded SAND
SW-SC	Well Graded SAND with CLAY
SW-SM	Well Graded SAND with SILT
Topsoil	Topsoil
USGS 601	Gravel or Conglomerate I
USGS 654	Subgraywacke
USGS 670	Interbedded Sandstone and Shale
USGS 702	Quartzite
USGS 705	Schist
USGS 705	Schist
USGS 708	Gneiss
USGS 708	Gneiss
USGS 718	Granite I
Void	Void
Water	Water
Weathered Rock	Undefined
Water Table	Water Table during drilling
Delayed Water Table	Water Table after drilling

CHPE Champlain Hudson Power Express

Kiewit

CHA
III Winners Circle, PO Box 5269
Albany, NY 12205-0269
518.453.4500 . www.chacompanies.com

STATE OF NEW YORK · JEFFREY O'DONNELL · 087450 · LICENSED PROFESSIONAL ENGINEER

IT IS A VIOLATION OF LAW FOR ANY PERSON, UNLESS THEY ARE ACTING UNDER THE DIRECTION OF A LICENSED PROFESSIONAL ENGINEER, ARCHITECT, LANDSCAPE ARCHITECT OR LAND SURVEYOR TO ALTER AN ITEM IN ANY WAY. IF AN ITEM BEARING THE STAMP OF A LICENSED PROFESSIONAL IS ALTERED, THE ALTERING ENGINEER, ARCHITECT, LANDSCAPE ARCHITECT OR LAND SURVEYOR SHALL STAMP THE DOCUMENT AND INCLUDE THE NOTATION "ALTERED BY" FOLLOWED BY THEIR SIGNATURE, THE DATE OF SUCH ALTERATION, AND A SPECIFIC DESCRIPTION OF THE ALTERATION.

No.	DATE	SUBMITTAL / REVISION DESCRIPTION	DB	APP
0	08/03/2023	ISSUED FOR CONSTRUCTION SUBMISSION	SPB	JEO

CHAMPLAIN HUDSON POWER EXPRESS
SEGMENT 6 (PACKAGE 4A) - CP: BALLSTON TO GLENVILLE
RAIL CROSS SECTION DETAILS HDD 59B

KIEWIT PROJECT NO. 21162

CHA PROJECT NO. 066076

DRAWING NO. C-647

DRAWN BY: JDL | DESIGNED BY: JDL | APPROVED BY: JEO | SCALE AS NOTED | REV. NO. F | DATE 8/03/2023 | SH.NO.

File: V:\PROJECTS\ANY\K6\066076.000\09_DESIGN\DRAWINGS\01_SHEETS\DESIGN PACKAGE 4\DESIGN PACKAGE 4\HDD WORKING\2023 P4A REALIGNMENT\066076_4A - C-307_C-307A.DWG Saved: 8/1/2023 6:29:16 PM Plotted: 8/1/2023 6:32:10 PM Current User: Snyder, Morgan LastSavedBy: 6043

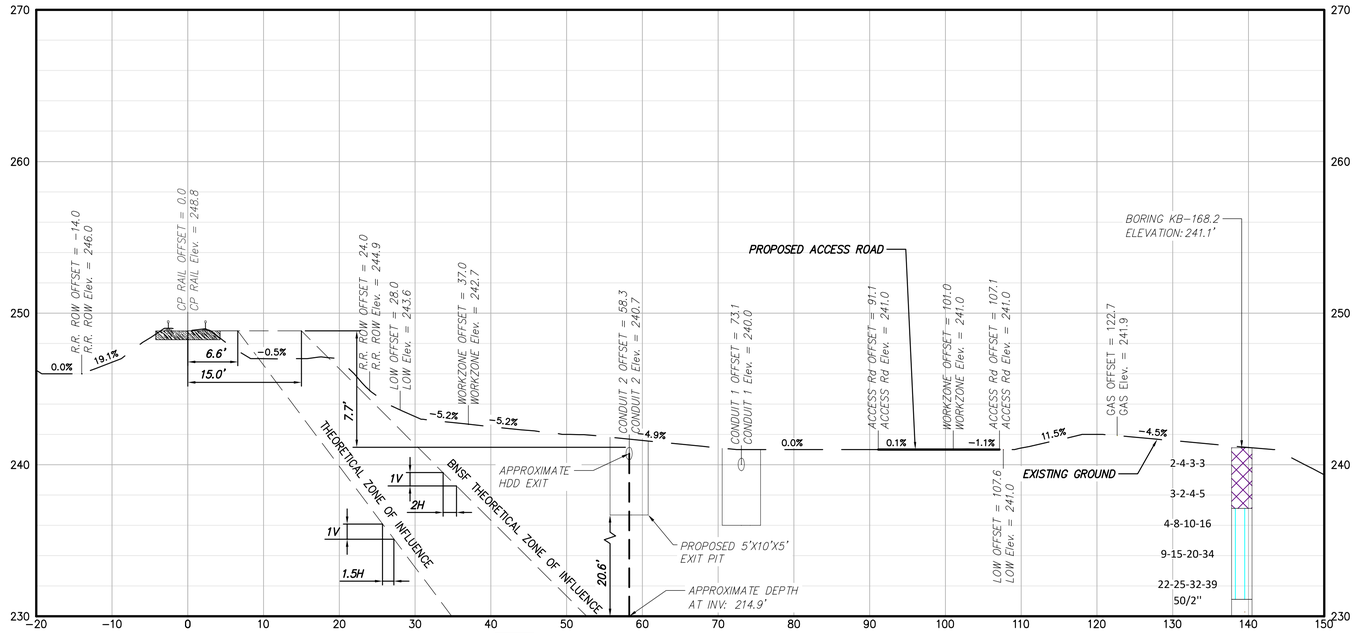

4 HDD 59B CONDUIT 2 EXIT PIT CUT SECTION; STA. 40498+07

CP RAIL CANADIAN MAINLINE MP: 22.12

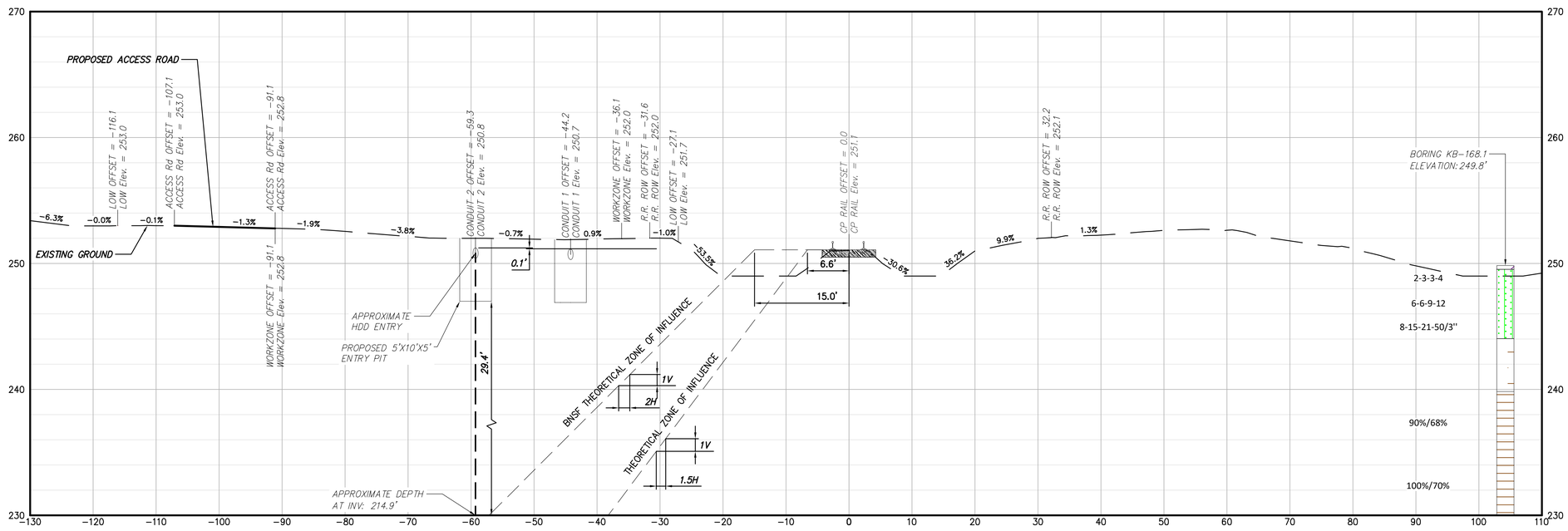

3 HDD 59B CONDUIT 2 ENTRY PIT CUT SECTION; STA. 40489+90

CP RAIL CANADIAN MAINLINE MP: 22.27

BORING LOG STRIP LEGEND

B101

Blow Counts per 6" = 10-10-10

Recovery %/RQD % = 95%/90%

11000psi =UCS

2D strip logs shown at 10x exaggeration

3D strip logs have no exaggeration

Legend

	ASPHALT	Asphalt
	Bedrock	Bedrock
	Boulder	Boulder
	CH	Fat CLAY
	CH-MH	SILTY Fat CLAY
	CL	Lean CLAY
	CL-ML	SILTY CLAY
	CONCRETE	Concrete
	Fill	Fill
	GC	CLAYEY GRAVEL
	GC-GM	SILTY CLAYEY GRAVEL
	GM	SILTY GRAVEL
	GP	Poorly Graded GRAVEL
	GP-GC	Poorly Graded Gravel with CLAY
	GP-GM	Poorly Graded GRAVEL with SILT
	GW	Well Graded GRAVEL
	GW-GC	Well Graded GRAVEL with CLAY
	GW-GM	Well Graded GRAVEL with SILT
	Limestone	Limestone
	MH	Elastic SILT
	ML	SILT
	OH	ORGANIC Fat CLAY
	OL	ORGANIC Lean CLAY
	OL/OH	ORGANIC SOIL
	PT	PEAT
	Rock	Rock
	Sandstone	Sandstone
	SC	CLAYEY SAND
	SC-SM	SILT, CLAYEY SAND
	SHALE	Shale
	SILTSTONE	Siltstone
	SM	SILTY SAND
	SP	Poorly Graded SAND
	SP-SC	Poorly Graded SAND with CLAY
	SP-SM	Poorly Graded SAND with SILT
	SW	Well graded SAND
	SW-SC	Well Graded SAND with CLAY
	SW-SM	Well Graded SAND with SILT
	Topsoil	Topsoil
	USGS 601	Gravel or Conglomerate I
	USGS 654	Subgraywacke
	USGS 670	Interbedded Sandstone and Shale
	USGS 702	Quartzite
	USGS 705	Schist
	USGS 705	Schist
	USGS 708	Gneiss
	USGS 708	Gneiss
	USGS 718	Granite I
	Void	Void
	Water	Water
	Weathered Rock	Undefined
▼	Water Table	Water Table during drilling
▽	Delayed Water Table	Water Table after drilling

0 10 20
Scale in feet

CHPE Champlain Hudson Power Express

Kiewit

CHA
III Winners Circle, PO Box 5269
Albany, NY 12205-0269
518.453.4500 . www.chacompanies.com

STATE OF NEW YORK · JEFFREY O'DONNELL · 087450 · LICENSED PROFESSIONAL ENGINEER

IT IS A VIOLATION OF LAW FOR ANY PERSON, UNLESS THEY ARE ACTING UNDER THE DIRECTION OF A LICENSED PROFESSIONAL ENGINEER, ARCHITECT, LANDSCAPE ARCHITECT OR LAND SURVEYOR TO ALTER AN ITEM IN ANY WAY. IF AN ITEM BEARING THE STAMP OF A LICENSED PROFESSIONAL IS ALTERED, THE ALTERING ENGINEER, ARCHITECT, LANDSCAPE ARCHITECT OR LAND SURVEYOR SHALL STAMP THE DOCUMENT AND INCLUDE THE NOTATION "ALTERED BY" FOLLOWED BY THEIR SIGNATURE, THE DATE OF SUCH ALTERATION, AND A SPECIFIC DESCRIPTION OF THE ALTERATION.

No.	DATE	SUBMITTAL / REVISION DESCRIPTION	DB	APP
0	08/03/2023	ISSUED FOR CONSTRUCTION SUBMISSION	SPB	JEO

CHAMPLAIN HUDSON POWER EXPRESS
SEGMENT 6 (PACKAGE 4A) - CP: BALLSTON TO GLENVILLE
RAIL CROSS SECTION DETAILS HDD 59B

KIEWIT PROJECT NO. 21162

CHA PROJECT NO. 066076

DRAWING NO. **C-647.1**

DRAWN BY: JDL DESIGNED BY: JDL APPROVED BY: JEO

SCALE AS NOTED DATE 8/03/2023

REV. NO. F SH.NO.

File: V:\PROJECTS\ANY\K6\066076.000\09_DESIGN\DRAWINGS\01_SHEETS\DESIGN PACKAGE 4\DESIGN PACKAGE 4\HDD WORKING\2023 P4A REALIGNMENT\066076_4A - C-307_C-307A.DWG Saved: 8/1/2023 6:29:16 PM Plotted: 8/1/2023 6:32:31 PM Current User: Snyder, Morgan LastSavedBy: 6043

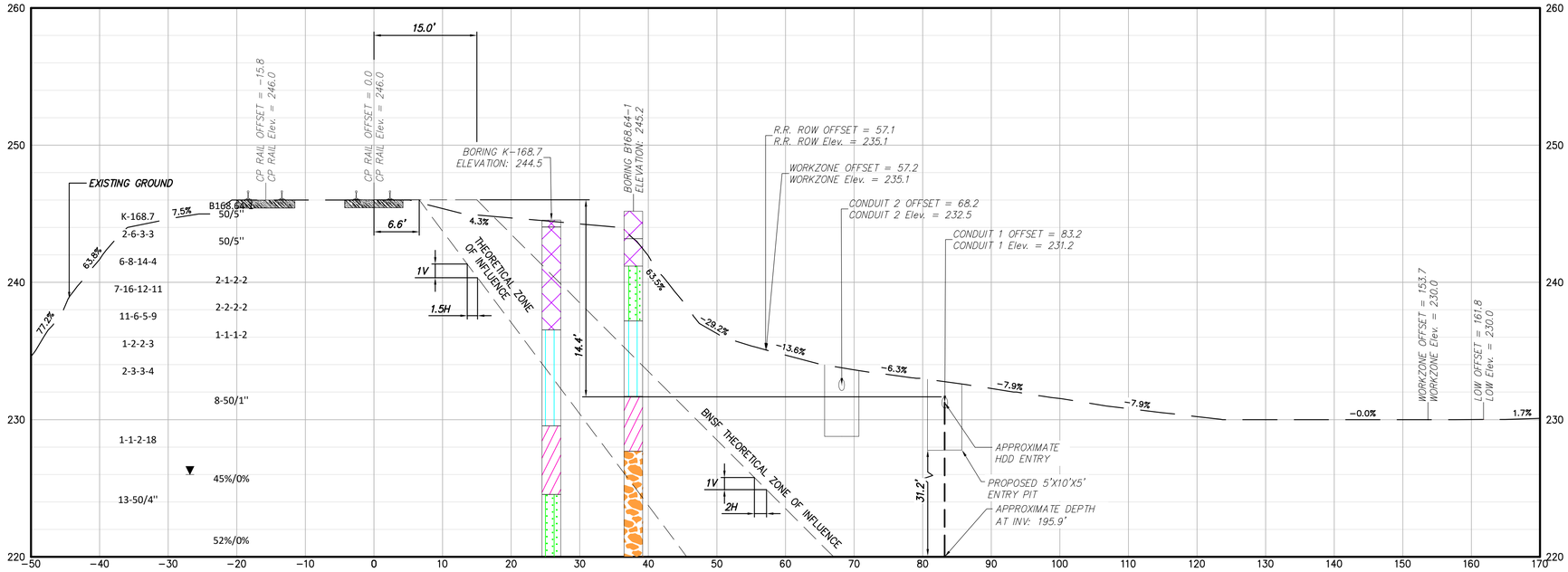

2 HDD 60 CONDUIT 1 ENTRY PIT CUT SECTION; STA. 40524+93

CP RAIL CANADIAN MAINLINE MP: 21.28

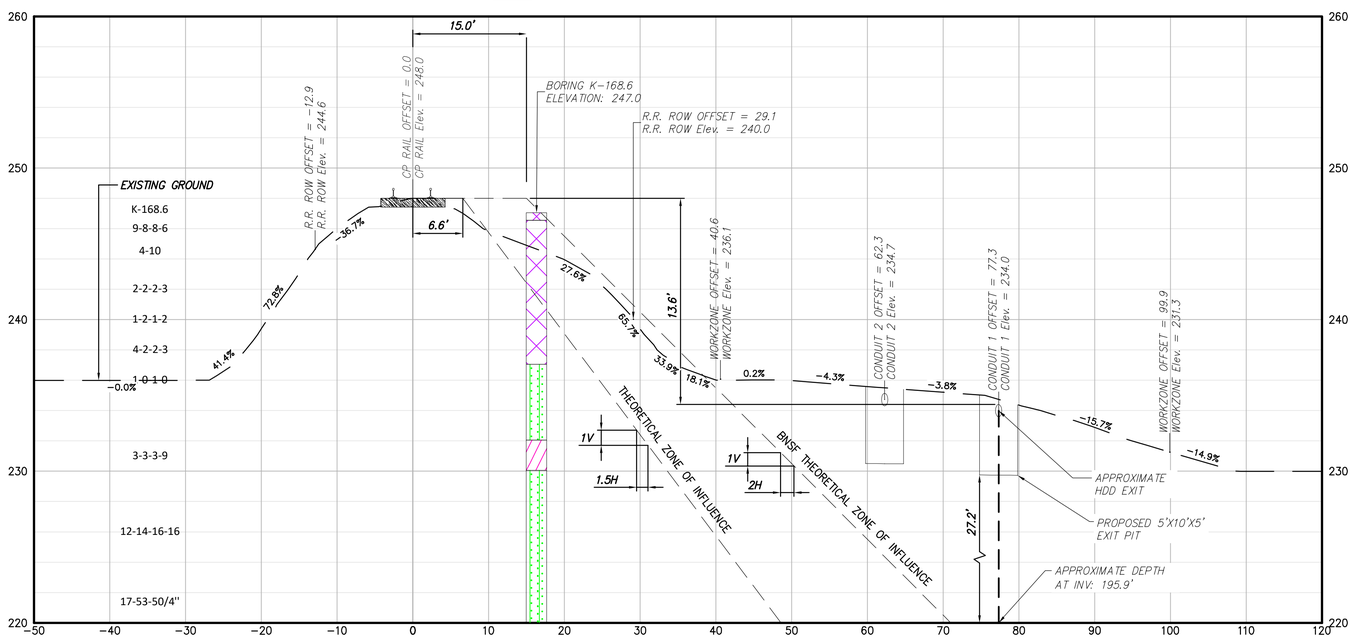

1 HDD 60 CONDUIT 1 EXIT PIT CUT SECTION; STA. 40511+72

CP RAIL CANADIAN MAINLINE MP: 21.53

BORING LOG STRIP LEGEND

B101

Blow Counts per 6" = 10-10-10

Recovery %/RQD % = 95%/90%

11000psi =UCS

2D strip logs shown at 10x exaggeration

3D strip logs have no exaggeration

Legend	
ASPHALT	Asphalt
Bedrock	Bedrock
Boulder	Boulder
CH	Fat CLAY
CH-MH	SILTY Fat CLAY
CL	Lean CLAY
CL-ML	SILTY CLAY
CONCRETE	Concrete
Fill	Fill
GC	CLAYEY GRAVEL
GC-GM	SILTY CLAYEY GRAVEL
GM	SILTY GRAVEL
GP	Poorly Graded GRAVEL
GP-GC	Poorly Graded Gravel with CLAY
GP-GM	Poorly Graded GRAVEL with SILT
GW	Well Graded GRAVEL
GW-GC	Well Graded GRAVEL with CLAY
GW-GM	Well Graded GRAVEL with SILT
Limestone	Limestone
MH	Elastic SILT
ML	SILT
OH	ORGANIC Fat CLAY
OL	ORGANIC Lean CLAY
OL/OH	ORGANIC SOIL
PT	PEAT
Rock	Rock
Sandstone	Sandstone
SC	CLAYEY SAND
SC-SM	SILT, CLAYEY SAND
SHALE	Shale
SILTSTONE	Siltstone
SM	SILTY SAND
SP	Poorly Graded SAND
SP-SC	Poorly Graded SAND with CLAY
SP-SM	Poorly Graded SAND with SILT
SW	Well graded SAND
SW-SC	Well Graded SAND with CLAY
SW-SM	Well Graded SAND with SILT
Topsoil	Topsoil
USGS 601	Gravel or Conglomerate I
USGS 654	Subgraywacke
USGS 670	Interbedded Sandstone and Shale
USGS 702	Quartzite
USGS 705	Schist
USGS 705	Schist
USGS 708	Gneiss
USGS 708	Gneiss
USGS 718	Granite I
Void	Void
Water	Water
Weathered Rock	Undefined
Water Table	Water Table during drilling
Delayed Water Table	Water Table after drilling

Scale in feet

CHPE Champlain Hudson Power Express

Kiewit

CHA
III Winners Circle, PO Box 5269
Albany, NY 12205-0269
518.453.4500 . www.chacompanies.com

STATE OF NEW YORK · JEFFREY O'DONNELL · 087450 · LICENSED PROFESSIONAL ENGINEER

IT IS A VIOLATION OF LAW FOR ANY PERSON, UNLESS THEY ARE ACTING UNDER THE DIRECTION OF A LICENSED PROFESSIONAL ENGINEER, ARCHITECT, LANDSCAPE ARCHITECT OR LAND SURVEYOR TO ALTER AN ITEM IN ANY WAY. IF AN ITEM BEARING THE STAMP OF A LICENSED PROFESSIONAL IS ALTERED, THE ALTERING ENGINEER, ARCHITECT, LANDSCAPE ARCHITECT OR LAND SURVEYOR SHALL STAMP THE DOCUMENT AND INCLUDE THE NOTATION "ALTERED BY" FOLLOWED BY THEIR SIGNATURE, THE DATE OF SUCH ALTERATION, AND A SPECIFIC DESCRIPTION OF THE ALTERATION.

No.	DATE	SUBMITTAL / REVISION DESCRIPTION	DB	APP
0	08/03/2023	ISSUED FOR CONSTRUCTION SUBMISSION	SPB	JEO

CHAMPLAIN HUDSON POWER EXPRESS
SEGMENT 6 (PACKAGE 4A) - CP: BALLSTON TO GLENVILLE
RAIL CROSS SECTION DETAILS HDD 60

KIEWIT PROJECT NO. 21162

CHA PROJECT NO. 066076

DRAWING NO. **C-648**

DRAWN BY: CKZ | DESIGNED BY: CKZ | APPROVED BY: JEO | SCALE AS NOTED | REV. NO. F | DATE 8/03/2023 | SH.NO.

File: V:\PROJECTS\ANY\K6\066076.000\09_DESIGN\DRAWINGS\01_SHEETS\DESIGN PACKAGE 4\DESIGN PACKAGE A\066076_4A - C-308-C308A.1.DWG Saved: 8/1/2023 9:23:45 AM Plotted: 8/1/2023 5:31:08 PM Current User: Snyder, Morgan LastSavedBy: 6043

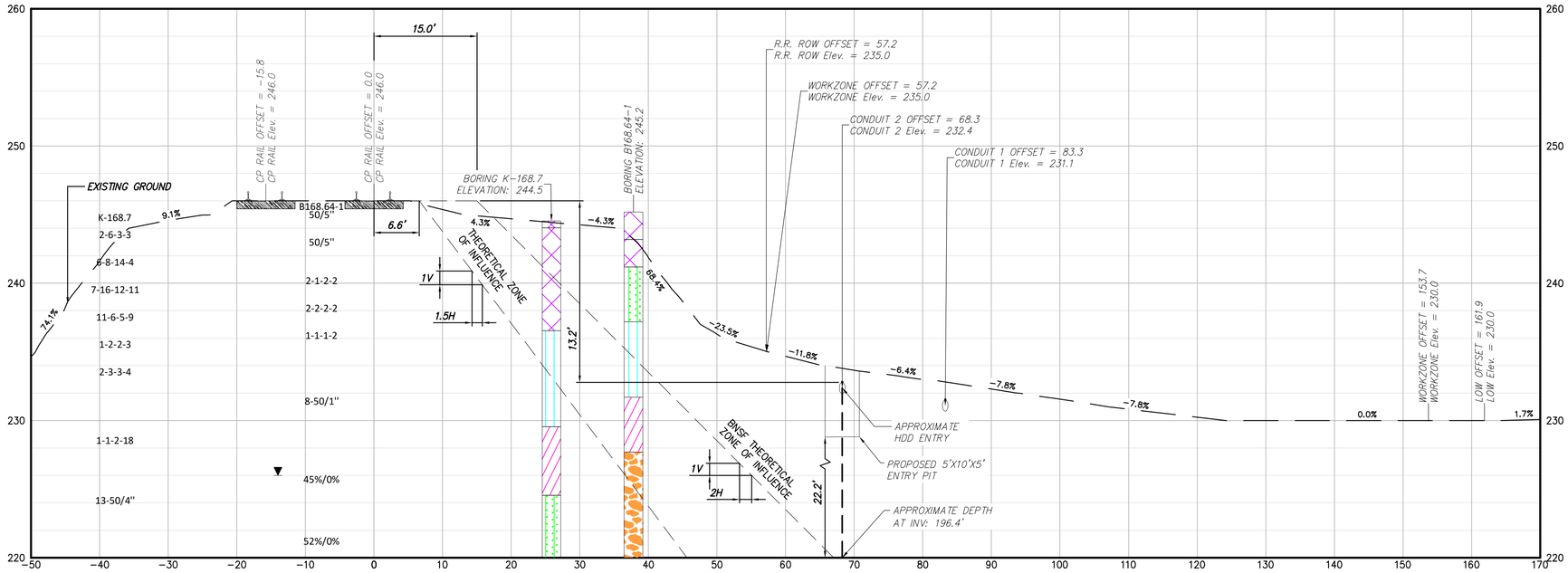

4 HDD 60 CONDUIT 2 ENTRY PIT CUT SECTION; STA. 40524+92

CP RAIL CANADIAN MAINLINE MP: 21.28

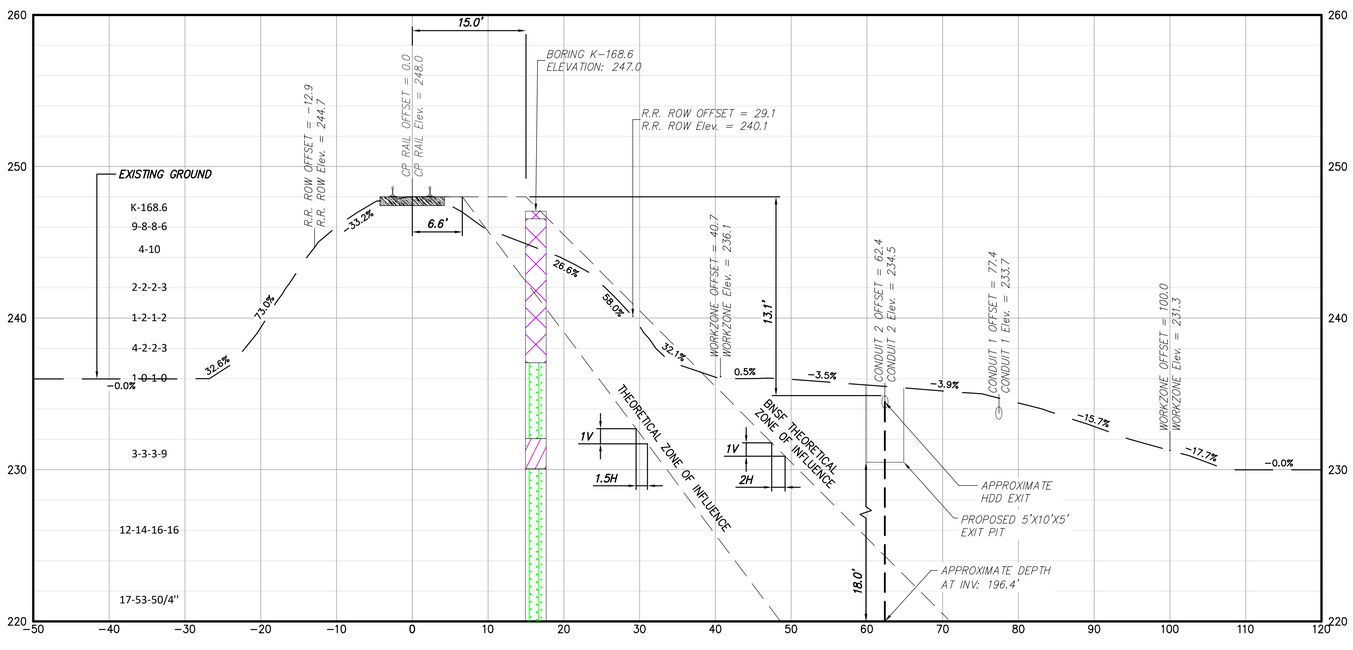

3 HDD 60 CONDUIT 2 EXIT PIT CUT SECTION; STA. 40511+72

CP RAIL CANADIAN MAINLINE MP: 21.53

BORING LOG STRIP LEGEND

B101

Blow Counts per 6" = 10-10-10

Recovery %/RQD % = 95%/90%

11000psi =UCS

2D strip logs shown at 10x exaggeration

3D strip logs have no exaggeration

Legend	
ASPHALT	Asphalt
Bedrock	Bedrock
Boulder	Boulder
CH	Fat CLAY
CH-MH	SILTY Fat CLAY
CL	Lean CLAY
CL-ML	SILTY CLAY
CONCRETE	Concrete
Fill	Fill
GC	CLAYEY GRAVEL
GC-GM	SILTY CLAYEY GRAVEL
GM	SILTY GRAVEL
GP	Poorly Graded GRAVEL
GP-GC	Poorly Graded Gravel with CLAY
GP-GM	Poorly Graded GRAVEL with SILT
GW	Well Graded GRAVEL
GW-GC	Well Graded GRAVEL with CLAY
GW-GM	Well Graded GRAVEL with SILT
Limestone	Limestone
MH	Elastic SILT
ML	SILT
OH	ORGANIC Fat CLAY
OL	ORGANIC Lean CLAY
OL/OH	ORGANIC SOIL
PT	PEAT
Rock	Rock
Sandstone	Sandstone
SC	CLAYEY SAND
SC-SM	SILT, CLAYEY SAND
SHALE	Shale
SILTSTONE	Siltstone
SM	SILTY SAND
SP	Poorly Graded SAND
SP-SC	Poorly Graded SAND with CLAY
SP-SM	Poorly Graded SAND with SILT
SW	Well graded SAND
SW-SC	Well Graded SAND with CLAY
SW-SM	Well Graded SAND with SILT
Topsoil	Topsoil
USGS 601	Gravel or Conglomerate 1
USGS 654	Subgraywacke
USGS 670	Interbedded Sandstone and Shale
USGS 702	Quartzite
USGS 705	Schist
USGS 705	Schist
USGS 708	Gneiss
USGS 708	Gneiss
USGS 718	Granite 1
Void	Void
Water	Water
Weathered Rock	Undefined
Water Table	Water Table during drilling
Delayed Water Table	Water Table after drilling

0 5 10 Scale in feet

CHPE Champlain Hudson Power Express

Kiewit

CHA
III Winners Circle, PO Box 5269
Albany, NY 12205-0269
518.453.4500 . www.chacompanies.com

STATE OF NEW YORK · JEFFREY O'DONNELL · 087450 · LICENSED PROFESSIONAL ENGINEER

IT IS A VIOLATION OF LAW FOR ANY PERSON, UNLESS THEY ARE ACTING UNDER THE DIRECTION OF A LICENSED PROFESSIONAL ENGINEER, ARCHITECT, LANDSCAPE ARCHITECT OR LAND SURVEYOR TO ALTER AN ITEM IN ANY WAY. IF AN ITEM BEARING THE STAMP OF A LICENSED PROFESSIONAL IS ALTERED, THE ALTERING ENGINEER, ARCHITECT, LANDSCAPE ARCHITECT OR LAND SURVEYOR SHALL STAMP THE DOCUMENT AND INCLUDE THE NOTATION "ALTERED BY" FOLLOWED BY THEIR SIGNATURE, THE DATE OF SUCH ALTERATION, AND A SPECIFIC DESCRIPTION OF THE ALTERATION.

No.	DATE	SUBMITTAL / REVISION DESCRIPTION	DB	APP
0	08/03/2023	ISSUED FOR CONSTRUCTION SUBMISSION	SPB	JEO

CHAMPLAIN HUDSON POWER EXPRESS
SEGMENT 6 (PACKAGE 4A) - CP: BALLSTON TO GLENVILLE
RAIL CROSS SECTION DETAILS HDD 60

KIEWIT PROJECT NO. 21162

CHA PROJECT NO. 066076

DRAWING NO. **C-648.1**

DRAWN BY: CKZ | DESIGNED BY: CKZ | APPROVED BY: JEO | SCALE AS NOTED | REV. NO. F | DATE 8/03/2023 | SH.NO.

File: V:\PROJECTS\ANY\K6\066076.000\09_DESIGN\DRAWINGS\01_SHEETS\DESIGN PACKAGE 4\DESIGN PACKAGE 4\066076_4A - C-308-C308A.1.DWG Saved: 8/1/2023 9:23:45 AM Plotted: 8/1/2023 5:31:54 PM Current User: Snyder, Morgan LastSavedBy: 6043

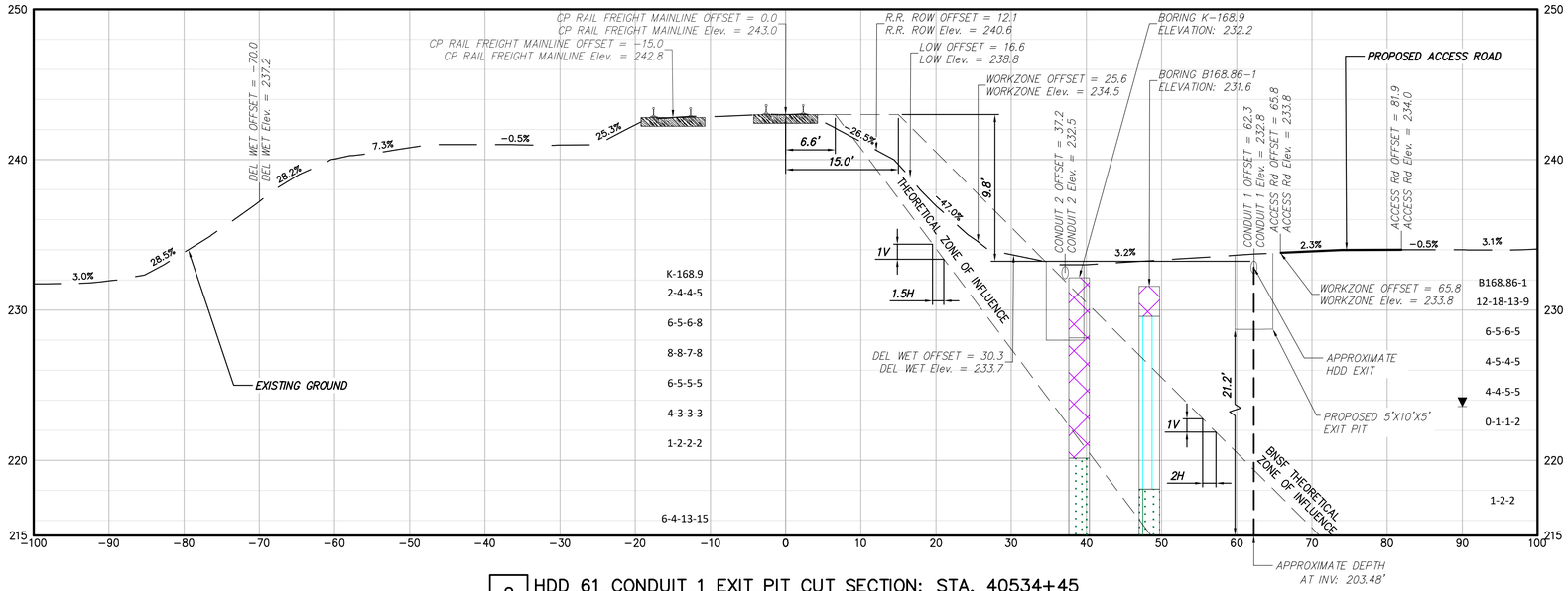

2 HDD 61 CONDUIT 1 EXIT PIT CUT SECTION; STA. 40534+45

CP RAIL CANADIAN MAINLINE MP: 21.10

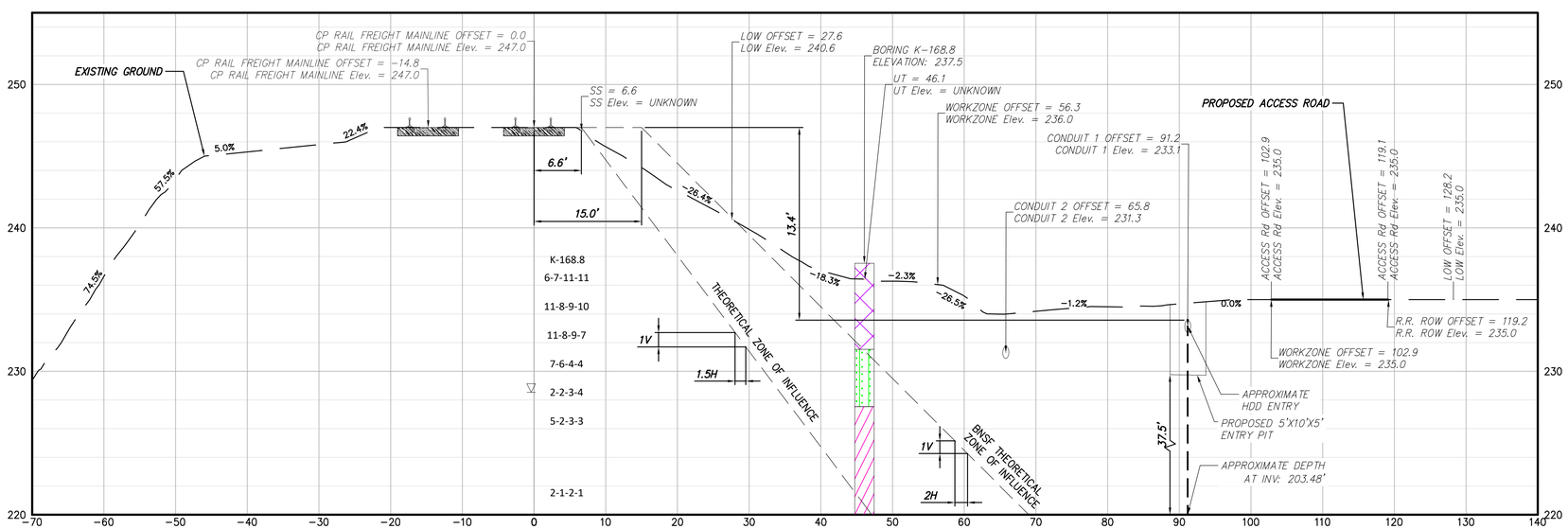

1 HDD 61 CONDUIT 1 ENTRY PIT CUT SECTION; STA. 40527+68

CP RAIL CANADIAN MAINLINE MP: 21.22

BORING LOG STRIP LEGEND

B101

Blow Counts per 6" = 10-10-10

Recovery %/RQD % = 95%/90%

11000psi =UCS

2D strip logs shown at 10x exaggeration

3D strip logs have no exaggeration

Legend

ASPHALT	Asphalt
Bedrock	Bedrock
Boulder	Boulder
CH	Fat CLAY
CH-MH	SILTY Fat CLAY
CL	Lean CLAY
CL-ML	SILTY CLAY
CONCRETE	Concrete
Fill	Fill
GC	CLAYEY GRAVEL
GC-GM	SILTY CLAYEY GRAVEL
GM	SILTY GRAVEL
GP	Poorly Graded GRAVEL
GP-GC	Poorly Graded Gravel with CLAY
GP-GM	Poorly Graded GRAVEL with SILT
GW	Well Graded GRAVEL
GW-GC	Well Graded GRAVEL with CLAY
GW-GM	Well Graded GRAVEL with SILT
Limestone	Limestone
MH	Elastic SILT
ML	SILT
OH	ORGANIC Fat CLAY
OL	ORGANIC Lean CLAY
OL/OH	ORGANIC SOIL
PT	PEAT
Rock	Rock
Sandstone	Sandstone
SC	CLAYEY SAND
SC-SM	SILT, CLAYEY SAND
SHALE	Shale
SILTSTONE	Siltstone
SM	SILTY SAND
SP	Poorly Graded SAND
SP-SC	Poorly Graded SAND with CLAY
SP-SM	Poorly Graded SAND with SILT
SW	Well graded SAND
SW-SC	Well Graded SAND with CLAY
SW-SM	Well Graded SAND with SILT
Topsoil	Topsoil
USGS 601	Gravel or Conglomerate 1
USGS 654	Subgraywacke
USGS 670	Interbedded Sandstone and Shale
USGS 702	Quartzite
USGS 705	Schist
USGS 705	Schist
USGS 708	Gneiss
USGS 708	Gneiss
USGS 718	Granite 1
Void	Void
Water	Water
Weathered Rock	Undefined
Water Table	Water Table during drilling
Delayed Water Table	Water Table after drilling

0 10 20 Scale in feet

CHPE Champlain Hudson Power Express

Kiewit

CHA
III Winners Circle, PO Box 5269
Albany, NY 12205-0269
518.453.4500 . www.chacompanies.com

STATE OF NEW YORK · JEFFREY O'DONNELL · 087450 · LICENSED PROFESSIONAL ENGINEER

IT IS A VIOLATION OF LAW FOR ANY PERSON, UNLESS THEY ARE ACTING UNDER THE DIRECTION OF A LICENSED PROFESSIONAL ENGINEER, ARCHITECT, LANDSCAPE ARCHITECT OR LAND SURVEYOR TO ALTER AN ITEM IN ANY WAY. IF AN ITEM BEARING THE STAMP OF A LICENSED PROFESSIONAL IS ALTERED, THE ALTERING ENGINEER, ARCHITECT, LANDSCAPE ARCHITECT OR LAND SURVEYOR SHALL STAMP THE DOCUMENT AND INCLUDE THE NOTATION "ALTERED BY" FOLLOWED BY THEIR SIGNATURE, THE DATE OF SUCH ALTERATION, AND A SPECIFIC DESCRIPTION OF THE ALTERATION.

No.	DATE	SUBMITTAL / REVISION DESCRIPTION	DB	APP
0	08/03/2023	ISSUED FOR CONSTRUCTION SUBMISSION	SPB	JEO

CHAMPLAIN HUDSON POWER EXPRESS
SEGMENT 6 (PACKAGE 4A) - CP: BALLSTON TO GLENVILLE
RAIL CROSS SECTION DETAILS HDD 61

KIEWIT PROJECT NO. 21162

CHA PROJECT NO. 066076

DRAWING NO. C-649

DRAWN BY: ES DESIGNED BY: ES APPROVED BY: JEO SCALE AS NOTED REV. NO. F DATE 8/03/2023 SH.NO.

File: V:\PROJECTS\ANY\K6\066076.000\09_DESIGN\DRAWINGS\01_SHEETS\DESIGN PACKAGE 4\DESIGN PACKAGE A\066076_4A - C-309_C-309A.DWG Saved: 7/31/2023 3:05:59 PM Plotted: 7/31/2023 3:12:13 PM Current User: Snyder, Morgan LastSavedBy: 8275

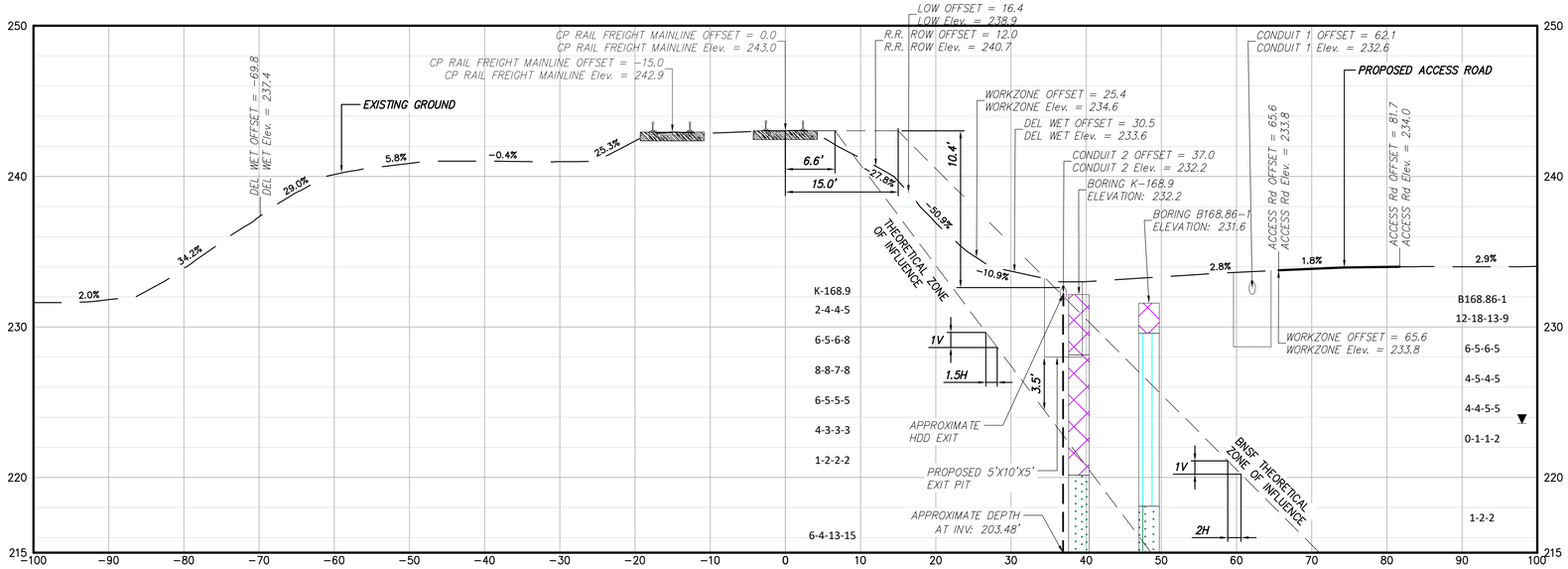

4 HDD 61 CONDUIT 2 EXIT PIT CUT SECTION; STA. 40534+41

CP RAIL CANADIAN MAINLINE MP: 21.10

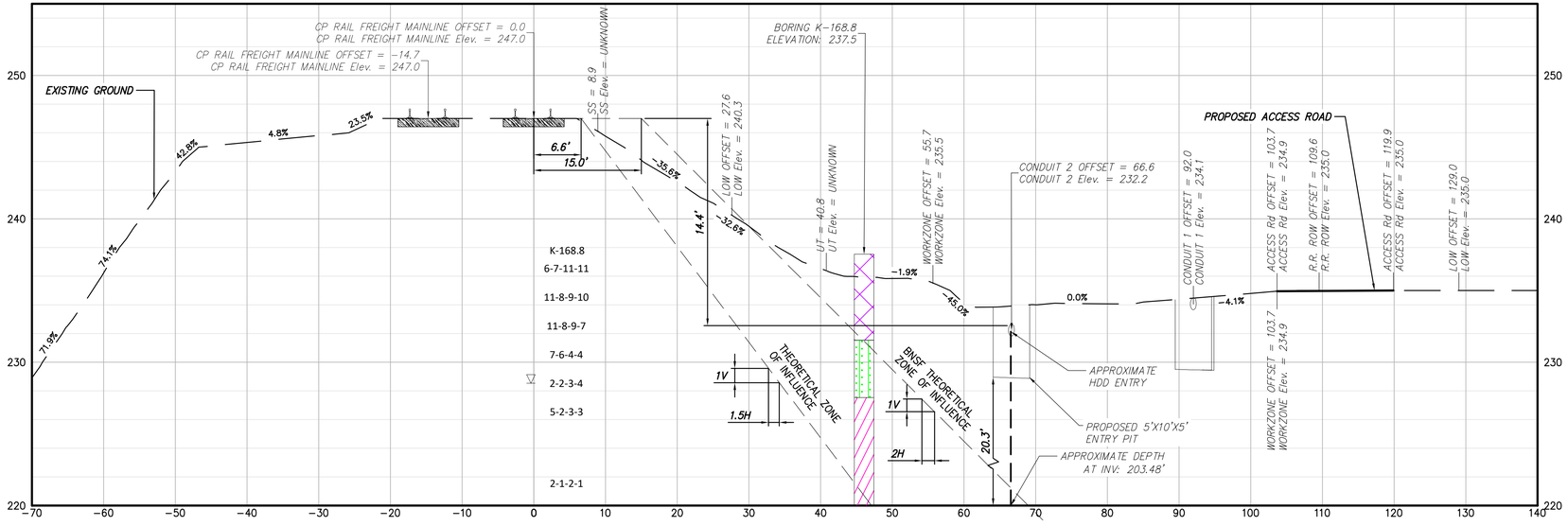

3 HDD 61 CONDUIT 2 ENTRY PIT CUT SECTION; STA. 40527+69

CP RAIL CANADIAN MAINLINE MP: 21.22

BORING LOG STRIP LEGEND

B101

Blow Counts per 6" = 10-10-10

Recovery %/RQD % = 95%/90%

11000psi =UCS

2D strip logs shown at 10x exaggeration

3D strip logs have no exaggeration

Legend	
ASPHALT	Asphalt
Bedrock	Bedrock
Boulder	Boulder
CH	Fat CLAY
CH-MH	SILTY Fat CLAY
CL	Lean CLAY
CL-ML	SILTY CLAY
CONCRETE	Concrete
Fill	Fill
GC	CLAYEY GRAVEL
GC-GM	SILTY CLAYEY GRAVEL
GM	SILTY GRAVEL
GP	Poorly Graded GRAVEL
GP-GC	Poorly Graded Gravel with CLAY
GP-GM	Poorly Graded GRAVEL with SILT
GW	Well Graded GRAVEL
GW-GC	Well Graded GRAVEL with CLAY
GW-GM	Well Graded GRAVEL with SILT
Limestone	Limestone
MH	Elastic SILT
ML	SILT
OH	ORGANIC Fat CLAY
OL	ORGANIC Lean CLAY
OL/OH	ORGANIC SOIL
PT	PEAT
Rock	Rock
Sandstone	Sandstone
SC	CLAYEY SAND
SC-SM	SILT, CLAYEY SAND
SHALE	Shale
SILTSTONE	Siltstone
SM	SILTY SAND
SP	Poorly Graded SAND
SP-SC	Poorly Graded SAND with CLAY
SP-SM	Poorly Graded SAND with SILT
SW	Well graded SAND
SW-SC	Well Graded SAND with CLAY
SW-SM	Well Graded SAND with SILT
Topsoil	Topsoil
USGS 601	Gravel or Conglomerate 1
USGS 654	Subgraywacke
USGS 670	Interbedded Sandstone and Shale
USGS 702	Quartzite
USGS 705	Schist
USGS 705	Schist
USGS 708	Gneiss
USGS 708	Gneiss
USGS 718	Granite 1
Void	Void
Water	Water
Weathered Rock	Undefined
Water Table	Water Table during drilling
Delayed Water Table	Water Table after drilling

0 10 20 Scale in feet

CHPE Champlain Hudson Power Express

Kiewit

CHA
III Winners Circle, PO Box 5269
Albany, NY 12205-0269
518.453.4500 . www.chacompanies.com

STATE OF NEW YORK · JEFFREY O'DONNELL · 087450 · LICENSED PROFESSIONAL ENGINEER

IT IS A VIOLATION OF LAW FOR ANY PERSON, UNLESS THEY ARE ACTING UNDER THE DIRECTION OF A LICENSED PROFESSIONAL ENGINEER, ARCHITECT, LANDSCAPE ARCHITECT OR LAND SURVEYOR TO ALTER AN ITEM IN ANY WAY. IF AN ITEM BEARING THE STAMP OF A LICENSED PROFESSIONAL IS ALTERED, THE ALTERING ENGINEER, ARCHITECT, LANDSCAPE ARCHITECT OR LAND SURVEYOR SHALL STAMP THE DOCUMENT AND INCLUDE THE NOTATION "ALTERED BY" FOLLOWED BY THEIR SIGNATURE, THE DATE OF SUCH ALTERATION, AND A SPECIFIC DESCRIPTION OF THE ALTERATION.

No.	DATE	SUBMITTAL / REVISION DESCRIPTION	DB	APP
0	08/03/2023	ISSUED FOR CONSTRUCTION SUBMISSION	SPB	JEO

CHAMPLAIN HUDSON POWER EXPRESS
SEGMENT 6 (PACKAGE 4A) - CP: BALLSTON TO GLENVILLE
RAIL CROSS SECTION DETAILS HDD 61

KIEWIT PROJECT NO. 21162

CHA PROJECT NO. 066076

DRAWING NO. **C-649.1**

DRAWN BY: ES | DESIGNED BY: ES | APPROVED BY: JEO | SCALE AS NOTED | DATE 8/03/2023 | REV. NO. F | SH.NO.

File: V:\PROJECTS\ANY\K6\066076.000\09_DESIGN\DRAWINGS\01_SHEETS\DESIGN PACKAGE 4\DESIGN PACKAGE 4\066076_4A - C-309_C-309A.DWG Saved: 7/31/2023 3:05:59 PM Plotted: 7/31/2023 3:12:48 PM Current User: Snyder, Morgan LastSavedBy: 8275

NOTES:

1. FOR LINK BOX DETAILS SEE ELECTRICAL DRAWINGS.
2. DESIGN LIVE LOAD: ANSI TIER 22 (OCCASIONAL NON-DELIBERATE HEAVY VEHICULAR TRAFFIC). VERTICAL DESIGN LOAD= 22,500 LBS; LATERAL DESIGN LOAD= 800 PSF.
3. APPROXIMATE DEMANDS FROM COOPER E-80 LIVE LOADING AT 25 FT DISTANCE, 6 FT BELOW GROUND: LATERAL DESIGN LOAD= 270 PSF.
4. ESTABLISH STABLE SUBGRADE CONDITIONS AS DIRECTED BY THE GEOTECHNICAL ENGINEER OR THEIR REPRESENTATIVE.

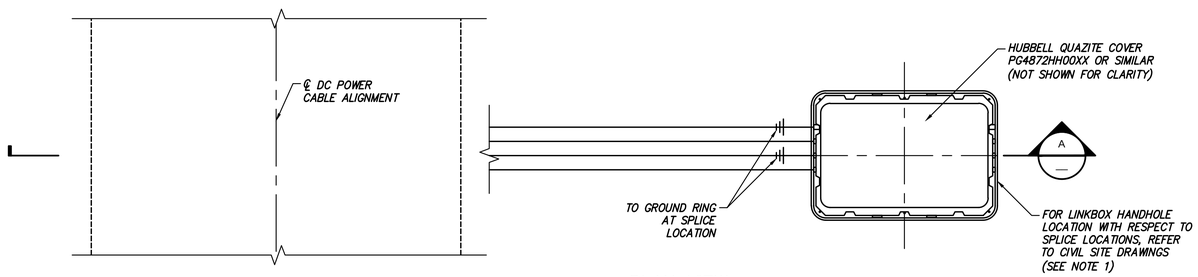

PLAN VIEW
SCALE: 3/8" = 1'-0"

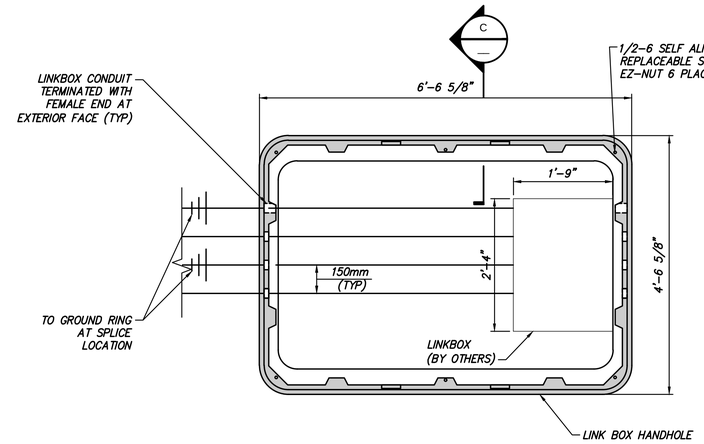

SECTION B
SCALE: 3/4" = 1'-0"

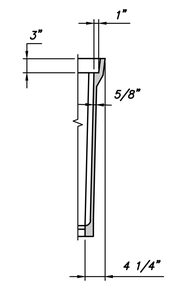

SECTION C
SCALE: 3/4" = 1'-0"

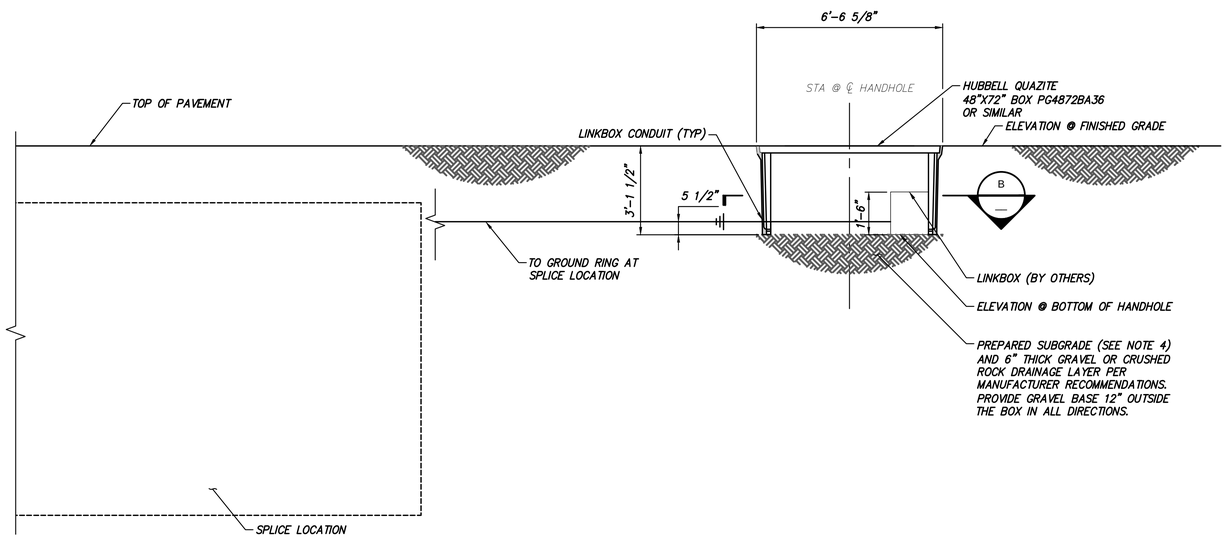

SECTION A
SCALE: 3/8" = 1'-0"

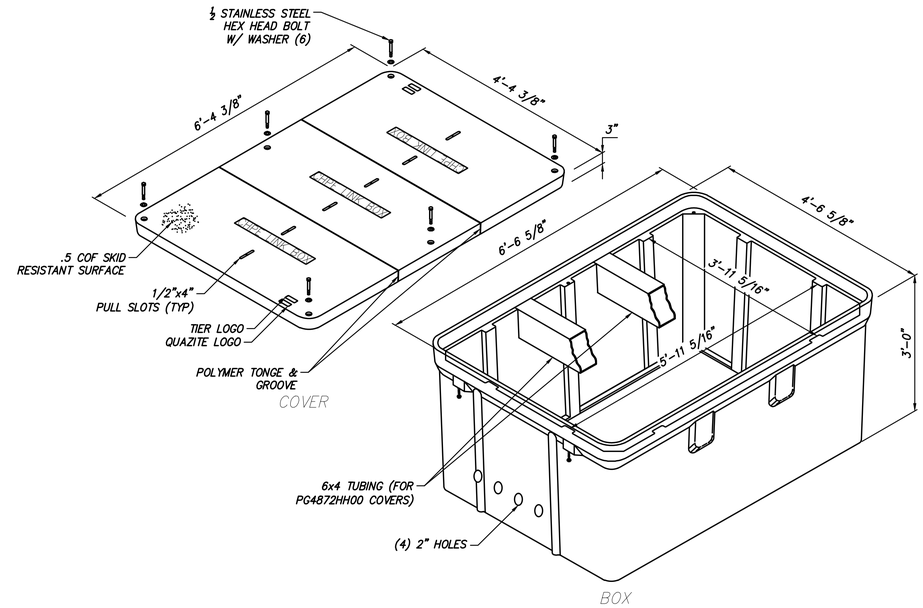

ISOMETRIC VIEW
SCALE: NTS

HUBBELL QUAZITE 48"x72" CORRUGATED WALL ASSEMBLY
PART NO. PG4872HH00XX AND PG4872BA36

CHPE Champlain Hudson Power Express

Kiewit

STATE OF NEW YORK · MARK WANCHUN JIN · 090036 · LICENSED PROFESSIONAL ENGINEER

IT IS A VIOLATION OF LAW FOR ANY PERSON, UNLESS THEY ARE ACTING UNDER THE DIRECTION OF A LICENSED PROFESSIONAL ENGINEER, ARCHITECT, LANDSCAPE ARCHITECT OR LAND SURVEYOR TO ALTER AN ITEM IN ANY WAY. IF AN ITEM BEARING THE STAMP OF A LICENSED PROFESSIONAL IS ALTERED, THE ALTERING ENGINEER, ARCHITECT, LANDSCAPE ARCHITECT OR LAND SURVEYOR SHALL STAMP THE DOCUMENT AND INCLUDE THE NOTATION "ALTERED BY" FOLLOWED BY THEIR SIGNATURE, THE DATE OF SUCH ALTERATION, AND A SPECIFIC DESCRIPTION OF THE ALTERATION.

No.	DATE	SUBMITTAL / REVISION DESCRIPTION	DB	APP
2	05/03/2023	RFC - VAULT UPDATES	JNK	OO
1	02/10/2023	REV 1 - IFC - NYSDOT HWP, SPLICE VAULT UPDATES	JNK	OO
0	12/21/2022	IFC SUBMISSION	JNK	OO

CHAMPLAIN HUDSON POWER EXPRESS

FRP LINK BOX HANDHOLES

DRAWN BY: DRH | DESIGNED BY: JNK | APPROVED BY: OO | SCALE AS SHOWN | REV. NO. 2

KIEWIT PROJECT NO. 21162

DRAWING NO. S-711

DATE 5/03/2023 | SH.NO.

File: P:\KIE-CHPE\3-DES\07 FRP\SHTS\21162_PROJECT_WBS_S_711.DWG, Sheet: 4/21/2023 5:44:01 PM, Plotted: 5/2/2023 11:40:04 AM, Current User: jnak, Layers: LinkFrame

NOTES:

1. DESIGN LIVE LOAD: ANSI TIER 22 (OCCASIONAL NON-DELIBERATE HEAVY VEHICULAR TRAFFIC). VERTICAL DESIGN LOAD= 22,500 LBS; LATERAL DESIGN LOAD= 800 PSF. QUAZITE OR SIMILAR.
2. ESTABLISH STABLE SUBGRADE CONDITIONS AS DIRECTED BY THE GEOTECHNICAL ENGINEER OR THEIR REPRESENTATIVE.
3. MINIMUM 4 FT OF COVER OVER TOP OF BOX WHEN LOCATED WITHIN AGRICULTURAL LANDS. MAXIMUM COVER IS 4.5 FT OVER TOP OF BOX.

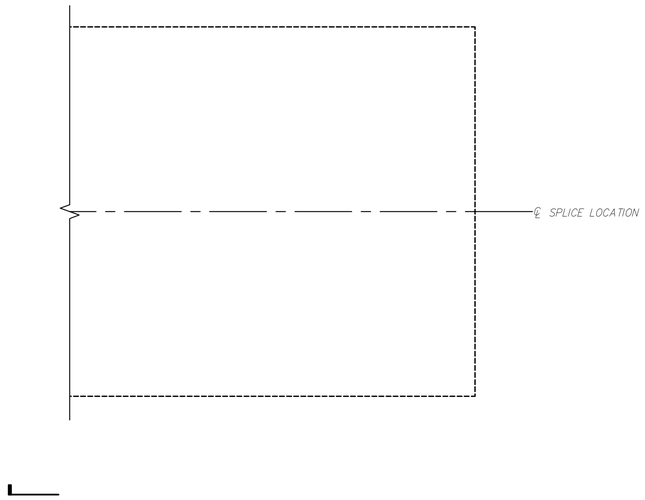

PLAN VIEW
SCALE: 3/8" = 1'-0"

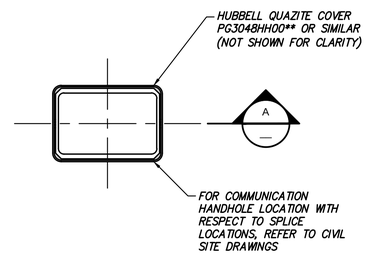

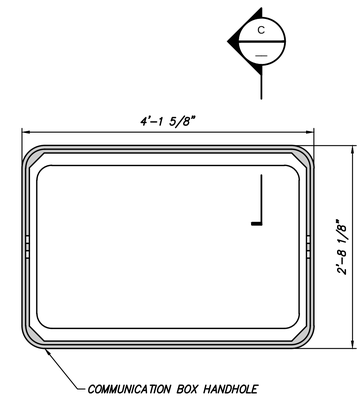

SECTION B
SCALE: 1" = 1'-0"

SECTION C
SCALE: 1" = 1'-0"

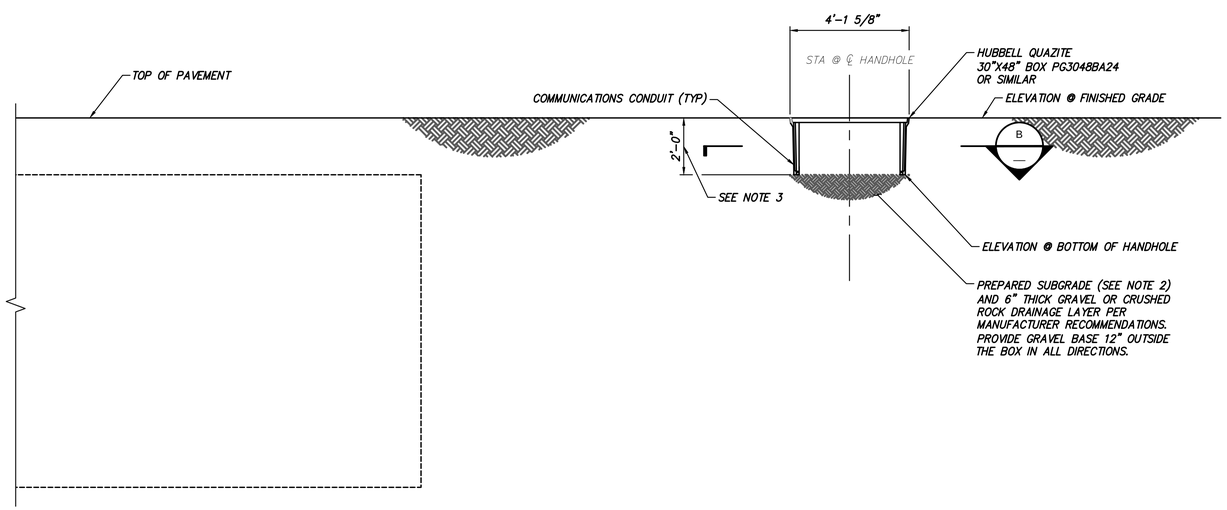

SECTION A
SCALE: 3/8" = 1'-0"

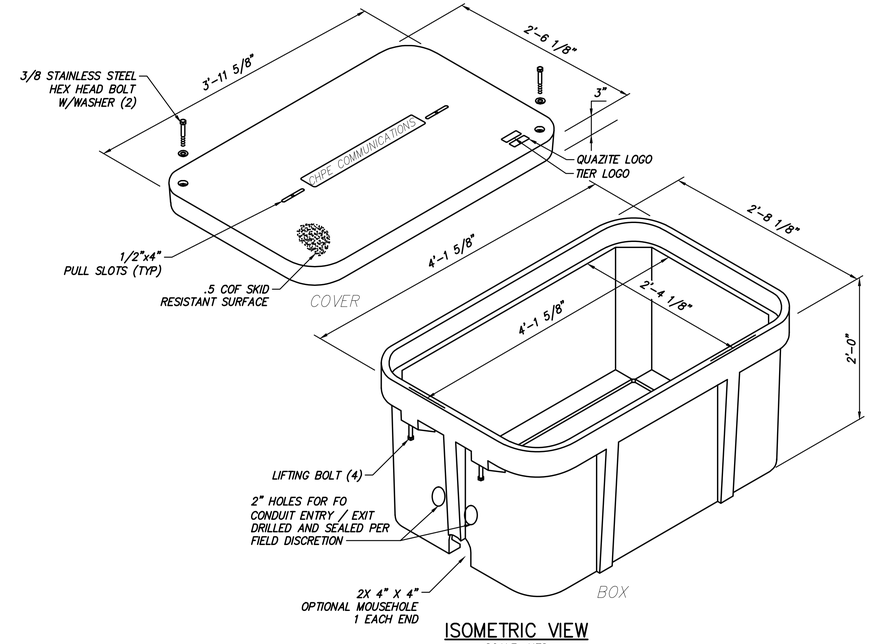

ISOMETRIC VIEW
SCALE: NTS

HUBBELL QUAZITE 30"x48" CORRUGATED WALL ASSEMBLY
PART NO. PG3048HH00** AND PG3048BA24

CHPE Champlain Hudson Power Express

Kiewit

STATE OF NEW YORK · MARK WANCHUN JIN · 090036 · LICENSED PROFESSIONAL ENGINEER

IT IS A VIOLATION OF LAW FOR ANY PERSON, UNLESS THEY ARE ACTING UNDER THE DIRECTION OF A LICENSED PROFESSIONAL ENGINEER, ARCHITECT, LANDSCAPE ARCHITECT OR LAND SURVEYOR TO ALTER AN ITEM IN ANY WAY. IF AN ITEM BEARING THE STAMP OF A LICENSED PROFESSIONAL IS ALTERED, THE ALTERING ENGINEER, ARCHITECT, LANDSCAPE ARCHITECT OR LAND SURVEYOR SHALL STAMP THE DOCUMENT AND INCLUDE THE NOTATION "ALTERED BY" FOLLOWED BY THEIR SIGNATURE, THE DATE OF SUCH ALTERATION, AND A SPECIFIC DESCRIPTION OF THE ALTERATION.

No.	DATE	SUBMITTAL / REVISION DESCRIPTION	DB	APP
2	05/03/2023	RFC - VAULT UPDATES	JNK	OO
1	02/10/2023	REV 1 - IFC - NYSDOT HWP, SPLICE VAULT UPDATES	JNK	OO
0	12/21/2022	IFC SUBMISSION	JNK	OO

CHAMPLAIN HUDSON POWER EXPRESS

FRP COMMUNICATION HANDHOLES

KIEWIT PROJECT NO. 21162

DRAWING NO. S-771

DRAWN BY: DRH | DESIGNED BY: JNK | APPROVED BY: OO | SCALE AS SHOWN | REV. NO. 2 | DATE | SH.NO.

File: P:\KIE-CHPE\3-DES\07 STRUCTURAL\21162 PROJECT WIDE S-771.DWG Saved: 5/4/2023 5:14:15 PM By:jnk Plotted: 5/9/2023 11:41:50 AM Current User: JonKerman LastSaved By: JonKerman

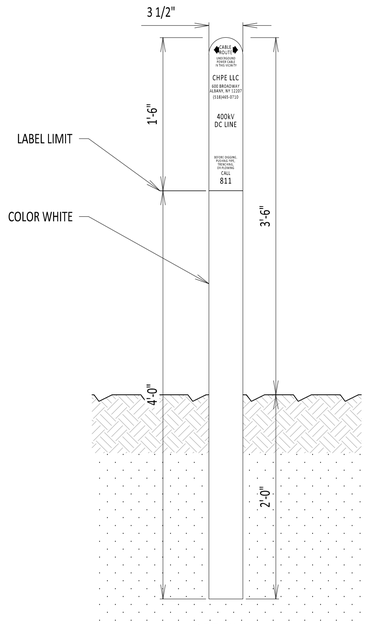

DETAIL A
NOT TO SCALE

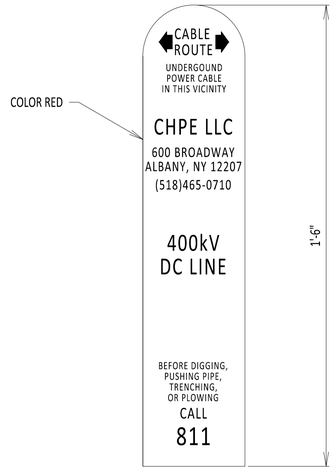

DETAIL B
NOT TO SCALE

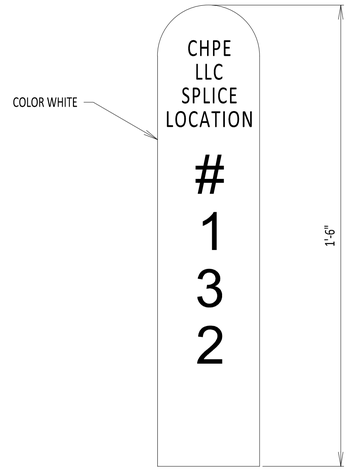

DETAIL C
NOT TO SCALE

NOTES:

1. POLES TO BE INSTALLED AT A DEPTH OF 2'-0" MINIMUM TO OPTIMIZE STABILITY.
2. IN PAVED AREAS, USE A-TAG PAVEMENT MARKERS OR SEE C-807 FOR APPROVED EQUAL.
3. EXCLUDING ROAD SURFACES, CONDUIT LOCATED WITHIN RAILROAD RIGHT-OF-WAY SHALL BE MARKED USING POLE MARKERS LOCATED ABOVE THE CENTERLINE OF THE CONDUIT. CROSSINGS SHALL BE MARKED ON BOTH SIDES OF THE TRACK.
4. POLE SHALL DISPLAY THE FOLLOWING: NAME AND ADDRESS OF OWNER, CONTENTS OF CONDUIT AND EMERGENCY TELEPHONE NUMBER.
5. POLES AND NEW CONSTRUCTION ELECTRIC A-TAG PAVEMENT MARKERS OR APPROVED EQUAL SHALL BE PLACED OVER THE CONDUIT AT ALL CHANGES IN DIRECTION OF THE CONDUIT. IN NO EVENT SHALL THEY BE PLACED MORE THAN 500 FEET APART.
6. OWNER MUST MAINTAIN SIGNS ON RAILWAY RIGHT-OF-WAY.
7. CABLE MARKERS PER AREMA CHAPTER 1 SECTION 5.5.2.i. A 6 INCH WIDE WARNING TAPE SHALL BE INSTALLED 1 FOOT BELOW NATURAL GRADE AND DIRECTLY OVER THE UNDERGROUND WIRELINE WITHIN THE RAILROAD RIGHT-OF-WAY. WARNING TAPE IS NOT REQUIRED FOR HORIZONTAL DIRECTION DRILLING ROUTES LOCATED ON RAILROAD PROPERTY. WITNESS POLES MUST BE PLACED AT RAILROAD RIGHT-OF-WAY FOR CROSSINGS AND PLACED EVERY 500 FEET FOR PARALLEL WIRELINES.
8. POLE MARKER SHALL BE VISIBLE 360 DEGREES AROUND POST (NOT A FLAT MARKER).

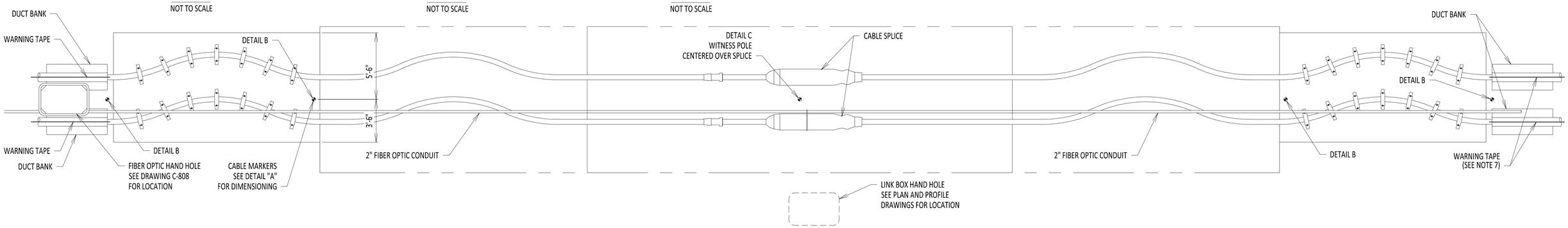

TYPICAL SPLICE LOCATION PLAN VIEW
NOT TO SCALE

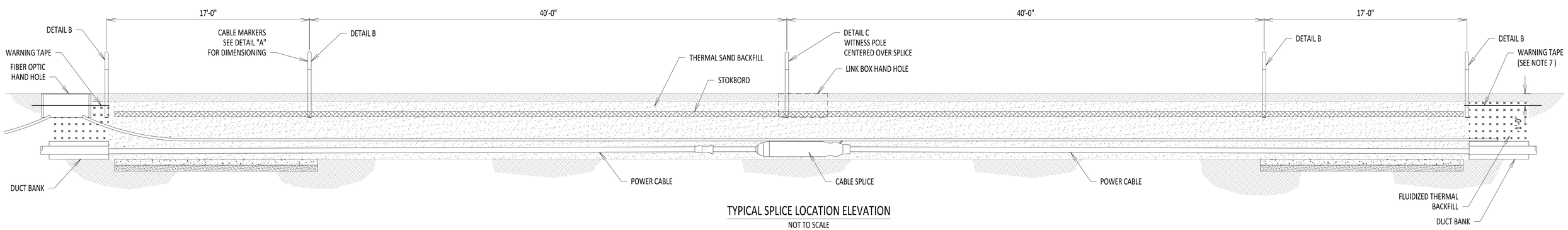

TYPICAL SPLICE LOCATION ELEVATION
NOT TO SCALE

CHPE Champlain Hudson Power Express

Kiewit

STATE OF NEW YORK · DONGKAI CHEN · 106996 · LICENSED PROFESSIONAL ENGINEER

IT IS A VIOLATION OF LAW FOR ANY PERSON, UNLESS THEY ARE ACTING UNDER THE DIRECTION OF A LICENSED PROFESSIONAL ENGINEER, ARCHITECT, LANDSCAPE ARCHITECT OR LAND SURVEYOR TO ALTER AN ITEM IN ANY WAY. IF AN ITEM BEARING THE STAMP OF A LICENSED PROFESSIONAL IS ALTERED, THE ALTERING ENGINEER, ARCHITECT, LANDSCAPE ARCHITECT OR LAND SURVEYOR SHALL STAMP THE DOCUMENT AND INCLUDE THE NOTATION "ALTERED BY" FOLLOWED BY THEIR SIGNATURE, THE DATE OF SUCH ALTERATION, AND A SPECIFIC DESCRIPTION OF THE ALTERATION.

No.	DATE	SUBMITTAL / REVISION DESCRIPTION	DB	APP
0	06/08/2023	ISSUED FOR CONSTRUCTION SUBMISSION	DLM	ASM

CHAMPLAIN HUDSON POWER EXPRESS

ABOVE GROUND MARKING DETAILS

DRAWN BY: DLM | DESIGNED BY: SD | APPROVED BY: ASM | SCALE | REV. NO. 0

KIEWIT PROJECT NO. 21162
CHA PROJECT NO. 066076
DRAWING NO. **C-801**
DATE 06/08/2023
SH.NO. OF

File: R:\INFO\PD\UGX STANDARDS\UNDERGROUND SHAREPOINT\PROJECTS\CHPE 400KV DC\WORKING FOLDER\DWG\C-801_ABOVE GROUND MARKER.DWG Saved: 6/5/2023 7:32:03 AM Plotted: 6/7/2023 8:06:37 AM Current User: Douglas.Mason LastSavedBy: Douglas.Mason

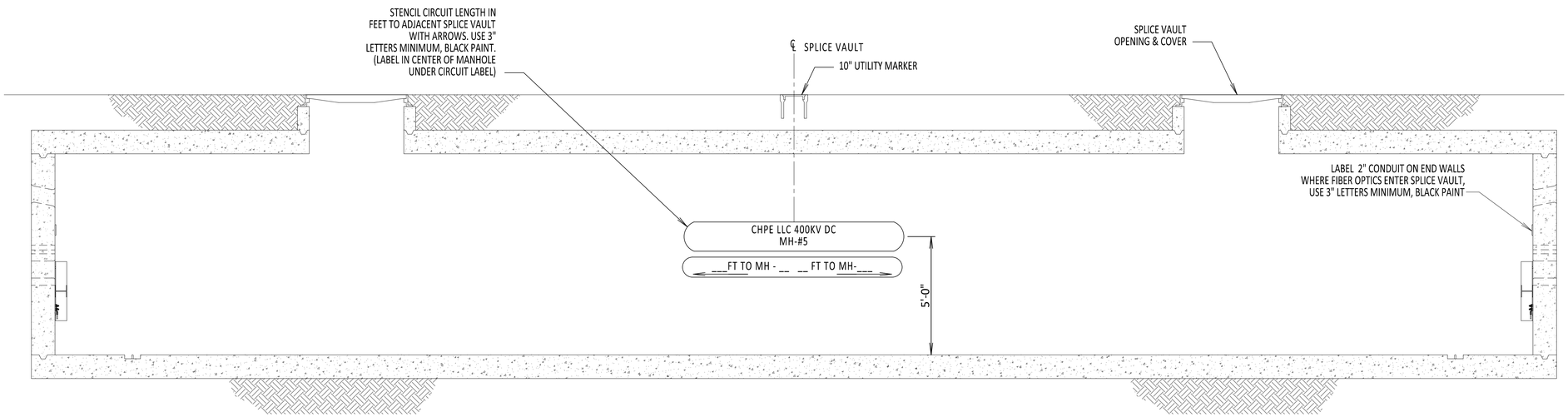

INSIDE SPLICE VAULT

NOT TO SCALE

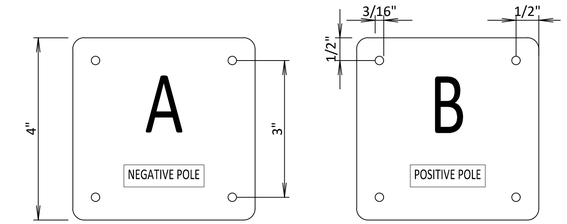

DC CABLE IDENTIFICATION TAGS

NOT TO SCALE

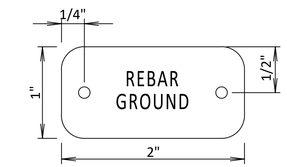

IDENTIFICATION TAGS

NOT TO SCALE

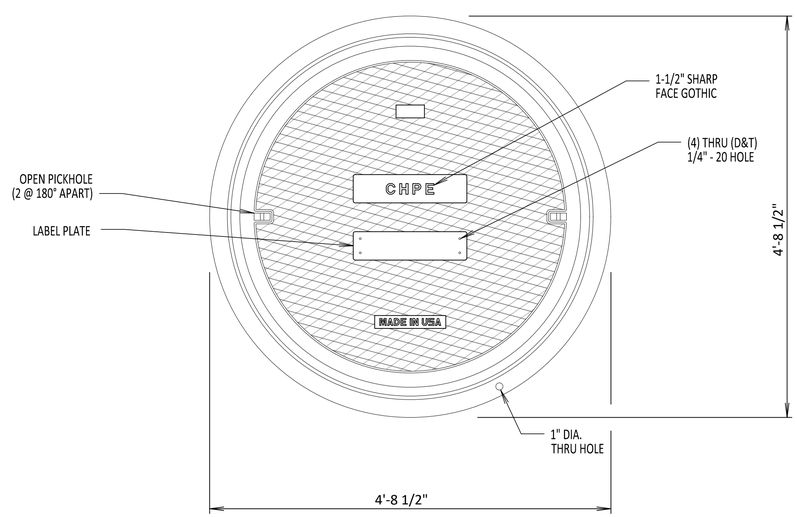

SPLICE VAULT LID MARKINGS PLAN VIEW

NOT TO SCALE

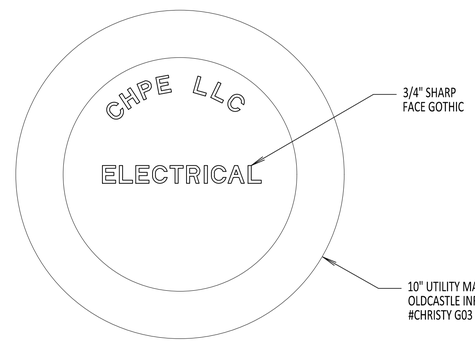

UTILITY MARKER DETAIL

NOT TO SCALE

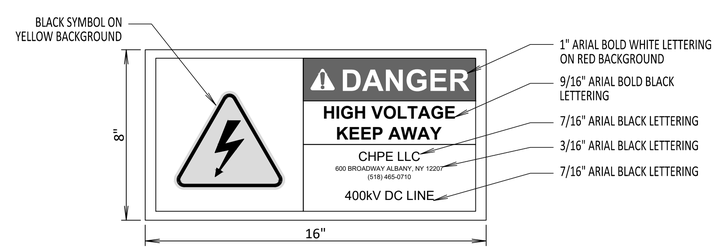

DETAIL 1 - CABLE TRAY WARNING LABEL

NOT TO SCALE

NOTE:

1. AFFIX DETAIL 1 LABEL TO THE CABLE TRAY BRIDGE ATTACHMENT AND AT 10-FOOT INTERVALS ALONG THE ENTIRE LENGTH OF THE CABLE TRAY ON THE BRIDGE

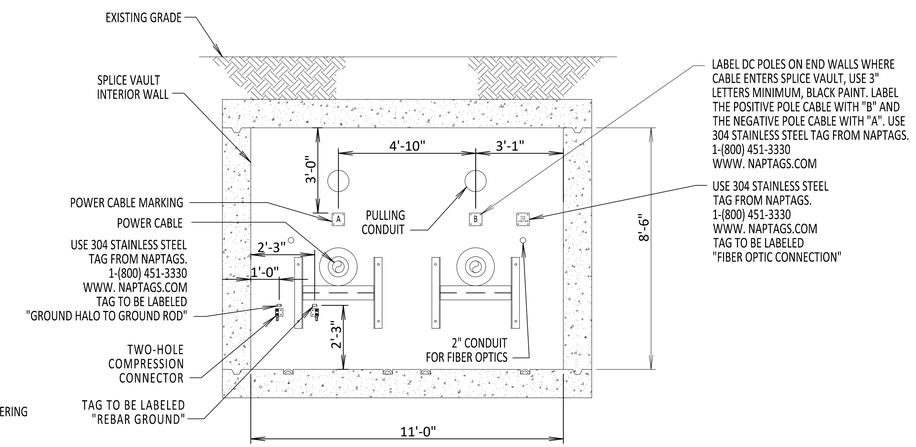

INSIDE ENDWALL VIEW

NOT TO SCALE

NOTE:

1. SEE PLAN AND PROFILES FOR LOCATION SPECIFIC LABELING INSTRUCTIONS OF WHICH SIDES RECEIVE EACH POLARITY LABEL.

CHPE Champlain Hudson Power Express

Kiewit

STATE OF NEW YORK · DONGKAI CHEN · 106996 · LICENSED PROFESSIONAL ENGINEER

IT IS A VIOLATION OF LAW FOR ANY PERSON, UNLESS THEY ARE ACTING UNDER THE DIRECTION OF A LICENSED PROFESSIONAL ENGINEER, ARCHITECT, LANDSCAPE ARCHITECT OR LAND SURVEYOR TO ALTER AN ITEM IN ANY WAY. IF AN ITEM BEARING THE STAMP OF A LICENSED PROFESSIONAL IS ALTERED, THE ALTERING ENGINEER, ARCHITECT, LANDSCAPE ARCHITECT OR LAND SURVEYOR SHALL STAMP THE DOCUMENT AND INCLUDE THE NOTATION "ALTERED BY" FOLLOWED BY THEIR SIGNATURE, THE DATE OF SUCH ALTERATION, AND A SPECIFIC DESCRIPTION OF THE ALTERATION.

No.	DATE	SUBMITTAL / REVISION DESCRIPTION	DB	APP
0	06/08/2023	ISSUED FOR CONSTRUCTION SUBMISSION	DLM	ASM

CHAMPLAIN HUDSON POWER EXPRESS

SPLICE VAULT AND CABLE MARKING DETAILS

KIEWIT PROJECT NO.	21162
CHA PROJECT NO.	066076
DRAWING NO.	C-807
DATE	06/08/2023
SH.NO.	OF

DRAWN BY: DLM DESIGNED BY: SD APPROVED BY: ASM SCALE REV. NO. 0

File: R:\WFO\PD\UGX STANDARDS\UNDERGROUND SHAREPOINT\PROJECTS\CHPE 400KV DC\WORKING FOLDER\DWG\C-807 MANHOLE MARKINGS.DWG Saved: 6/5/2023 9:08:25 AM Plotted: 6/5/2023 9:08:48 AM Current User: Douglas.Mason LastSavedBy: Douglas.Mason

NOTES:

1. ESTABLISH STABLE SUBGRADE CONDITIONS AS DIRECTED BY THE GEOTECHNICAL ENGINEER OR THEIR REPRESENTATIVE.
2. A MINIMUM BEDDING SECTION CONSISTING OF A 4-INCH THICK MUDMAT OR 4-INCH THICK SELECT GRANULAR FILL SHALL BE PLACED ON TOP OF PREPARED SUBGRADE. ADDITIONAL BEDDING MAY BE REQUIRED AS DIRECTED BY GEOTECHNICAL ENGINEER OR THEIR REPRESENTATIVE BASED ON IN-SITU CONDITIONS.
3. CONDUIT TO BE TEMPORARILY SEALED BY KIEWIT AFTER DUCT BANK INSTALLATION AND AFTER CABLE INSTALLATION. FINAL CABLE SEALING TO BE COMPLETED BY OTHERS.
4. HDPE RHINE BOARD CABLE COVER TO BE 3/8" THICK AND YELLOW COLORED.
5. LOCKING WAVE CONCRETE SLAB DEPICTED IS DESIGNED FOR A SUBMERGED GROUNDWATER CONDITION ENVIRONMENT. FIELD GROUNDWATER CONDITIONS MAY BE EVALUATED BY THE GEOTECHNICAL ENGINEER OF RECORD OR THEIR DESIGNATED REPRESENTATIVE . IF IT IS DETERMINED THE GROUNDWATER TABLE DOES NOT FLUCTUATE ABOVE THE CONCRETE SLAB ELEVATION, THE SLAB MAY BE REDUCED IN SIZE TO 9' IN WIDTH AND 17' IN LENGTH, MAINTAINING THE 6" THICKNESS AND REINFORCEMENT.

REFERENCE DOCUMENTS

LIST NO.	DOCUMENT NAME	DOCUMENT NO.
1	TYPICAL OPEN PIT GROUNDING DETAILS	C-809
2	OPEN VAULT HAND HOLE	C-853
3	FIBER OPTIC HAND HOLE DETAILS	C-854
4	FIBER OPTIC SPLICE DETAILS	C-855
5	TRENCHING AND BACKFILLING SPEC.	312333

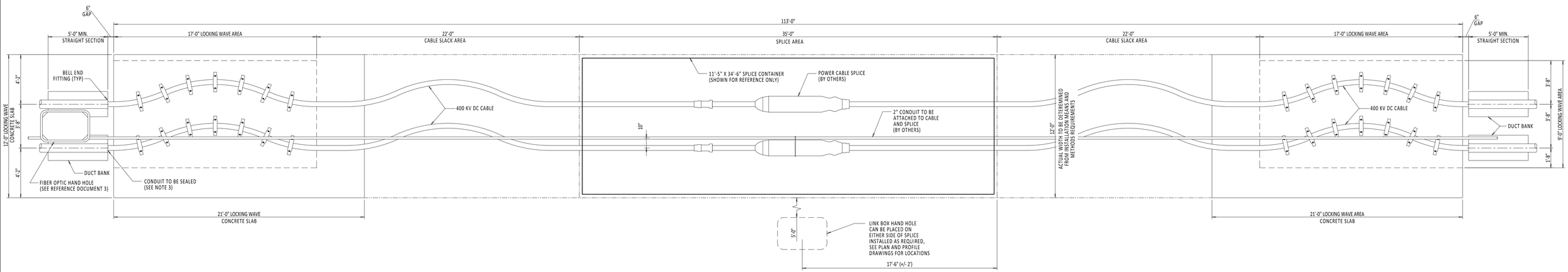

PLAN VIEW
OPEN SPLICE LOCATION
SCALE: 1/4" = 1'-0"

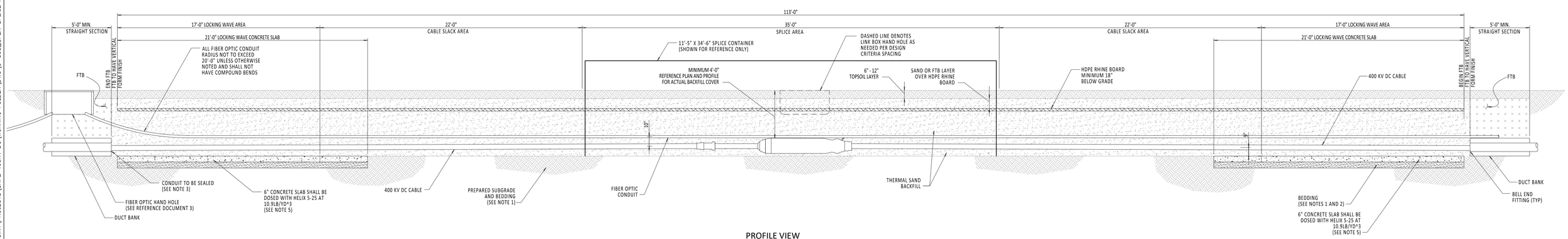

PROFILE VIEW
OPEN SPLICE LOCATION
SCALE: 1/4" = 1'-0"

CHPE Champlain Hudson Power Express

Kiewit

STATE OF NEW YORK · DONGKAI CHEN · 106996 · LICENSED PROFESSIONAL ENGINEER

IT IS A VIOLATION OF LAW FOR ANY PERSON, UNLESS THEY ARE ACTING UNDER THE DIRECTION OF A LICENSED PROFESSIONAL ENGINEER, ARCHITECT, LANDSCAPE ARCHITECT OR LAND SURVEYOR TO ALTER AN ITEM IN ANY WAY. IF AN ITEM BEARING THE STAMP OF A LICENSED PROFESSIONAL IS ALTERED, THE ALTERING ENGINEER, ARCHITECT, LANDSCAPE ARCHITECT OR LAND SURVEYOR SHALL STAMP THE DOCUMENT AND INCLUDE THE NOTATION "ALTERED BY" FOLLOWED BY THEIR SIGNATURE, THE DATE OF SUCH ALTERATION, AND A SPECIFIC DESCRIPTION OF THE ALTERATION.

No.	DATE	SUBMITTAL / REVISION DESCRIPTION	DB	APP
0	06/08/2023	ISSUED FOR CONSTRUCTION SUBMISSION	DLM	ASM

CHAMPLAIN HUDSON POWER EXPRESS

TYPICAL OPEN PIT SPLICE DETAILS

DRAWN BY: DLM | DESIGNED BY: SS | APPROVED BY: ASM | SCALE | REV. NO. 0

KIEWIT PROJECT NO. 21162
CHA PROJECT NO. 066076
DRAWING NO. **C-808**
DATE 06/08/2023
SH.NO. OF

File: R:\INFO\PD\UGX STANDARDS\UNDERGROUND SHAREPOINT\PROJECTS\CHPE 400KV DC\WORKING FOLDER\DWG\C-808_OPEN SPLICE PIT.DWG Saved: 6/6/2023 2:03:40 PM Plotted: 6/7/2023 7:36:52 AM Current User: Douglas.Mason LastSavedBy: Douglas.Mason

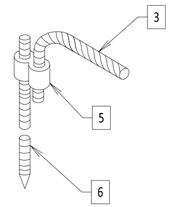

DETAIL A

NOT TO SCALE

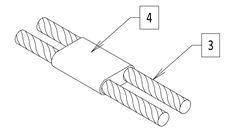

DETAIL B

NOT TO SCALE

NOTES:

1. FOR ADDITIONAL DESIGN PARAMETERS SEE SPECIFICATIONS.
2. ALL GROUND CONNECTIONS SHALL BE IRREVERSIBLE COMPRESSION CONNECTION UNLESS OTHERWISE NOTED.
3. LINK BOX WILL CONTAIN FOUR DISCONNECTING LINKS, AS PROVIDED BY VENDOR.
4. BONDING CABLE CONNECTION BETWEEN HIGH VOLTAGE DC CABLE SPLICE AND LINK BOX SHALL BE NO LONGER THAN 30 FEET. FIELD FIT EXACT LOCATION.
5. RESISTANCE OF GROUND GRID MEASURED RELATIVE TO DEEP EARTH SHALL BE 10 OHMS OR LESS. LENGTH AND NUMBER OF GROUND RODS TO BE DETERMINED BASED ON MEASURED GROUND ROD RESISTANCE.
6. KIEWIT HAS PROVIDED GROUNDING AS PER NKT REQUIREMENTS. NO OTHER ELECTRICAL SYSTEM DESIGN HAS BEEN INCLUDED BY KIEWIT.
7. WHERE THERE IS DIFFICULTY INSERTING GROUND RODS DUE TO SOIL CONDITIONS. REFER TO GROUNDING COMPONENTS AND INSTALLATION SPECIFICATION FOR ALTERNATIVE GROUND ROD INSTALLATION METHODS.

BILL OF MATERIALS

ITEM NO.	ITEM DESCRIPTION	MANUFACTURER & CATALOG NO.	PROVIDER	INSTALLER
1	LINK BOX	AS REQUIRED	NKT	KIEWIT
2	INSULATED GROUND CABLE	AS REQUIRED	NKT	NKT
3	BARE 4/0 GROUND CABLE	AS REQUIRED	KIEWIT	KIEWIT
4	COMPRESSION C CONNECTOR	BURNDY YGHC29C29	KIEWIT	KIEWIT
5	COMPRESSION CONNECTION TO GROUND ROD	BURNDY YGHR29C34	KIEWIT	KIEWIT
6	3/4" X 10'-0" GROUND ROD	NVENT ERICO 613400	KIEWIT	KIEWIT
7	3/4" STUD RING TERMINAL	BURNDY YAD28M20E34	KIEWIT	KIEWIT

APPROVED EQUAL MATERIAL MAYBE SUBMITTED FOR REVIEW AND APPROVAL.
QUANTITIES ARE MINIMUM - PROVIDER IS RESPONSIBLE FOR ALL MATERIAL ITEMS AND QUANTITIES.

REFERENCE DRAWINGS

LIST NO.	DRAWING NAME	DRAWING NO.
1	STRUCTURAL VAULT DRAWINGS	S-700
2	TYPICAL OPEN PIT SPLICE DETAILS	C-808
3	GROUNDING SPECIFICATIONS	260526.01

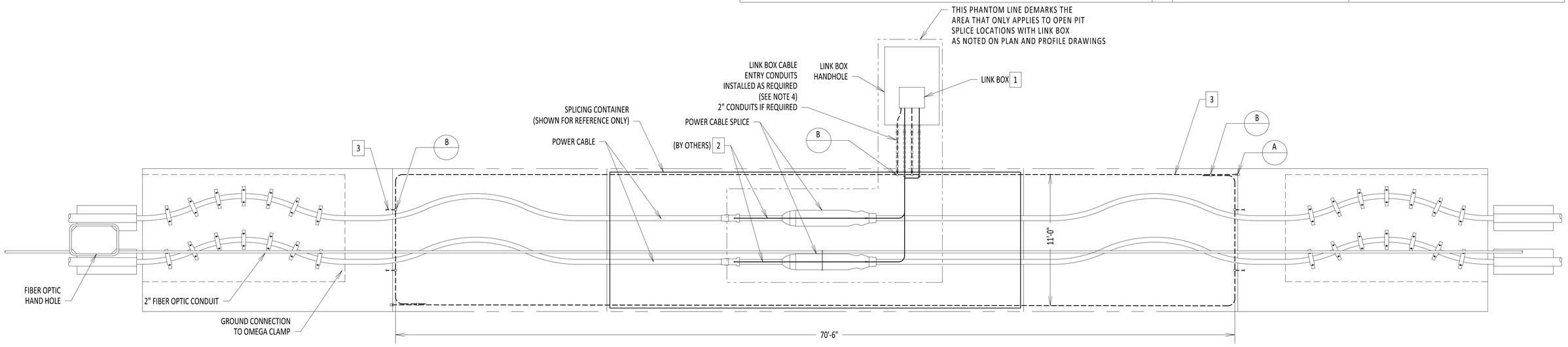

SPLICE LOCATION GROUNDING PLAN VIEW

NOT TO SCALE

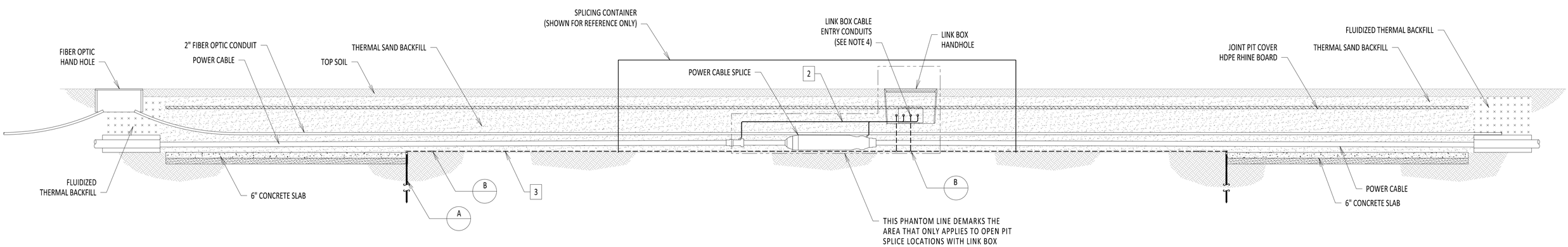

SPLICE LOCATION GROUNDING ELEVATION

NOT TO SCALE

CHPE Champlain Hudson Power Express

Kiewit

STATE OF NEW YORK · MICHAEL REIHS WHEELER · 103646 · LICENSED PROFESSIONAL ENGINEER

IT IS A VIOLATION OF LAW FOR ANY PERSON, UNLESS THEY ARE ACTING UNDER THE DIRECTION OF A LICENSED PROFESSIONAL ENGINEER, ARCHITECT, LANDSCAPE ARCHITECT OR LAND SURVEYOR TO ALTER AN ITEM IN ANY WAY. IF AN ITEM BEARING THE STAMP OF A LICENSED PROFESSIONAL IS ALTERED, THE ALTERING ENGINEER, ARCHITECT, LANDSCAPE ARCHITECT OR LAND SURVEYOR SHALL STAMP THE DOCUMENT AND INCLUDE THE NOTATION "ALTERED BY" FOLLOWED BY THEIR SIGNATURE, THE DATE OF SUCH ALTERATION, AND A SPECIFIC DESCRIPTION OF THE ALTERATION.

No.	DATE	SUBMITTAL / REVISION DESCRIPTION	DB	APP
0	06/08/2023	ISSUED FOR CONSTRUCTION SUBMISSION	DLM	ASM

CHAMPLAIN HUDSON POWER EXPRESS

OPEN PIT SPLICE GROUNDING DETAILS

DRAWN BY: DLM DESIGNED BY: SD APPROVED BY: ASM

SCALE NOT TO SCALE REV. NO. 0

KIEWIT PROJECT NO. 21162

CHA PROJECT NO. 066076

DRAWING NO. **C-809**

DATE 06/08/2023 SH.NO. OF

File: R:\INFO\PD\UGX STANDARDS\UNDERGROUND SHAREPOINT\PROJECTS\CHPE 400KV DC\WORKING FOLDER\DWG\C-809_OPEN PIT SPLICE GROUNDING.DWG Saved: 6/8/2023 3:25:25 PM Plotted: 6/9/2023 6:45:00 AM Current User: Douglas.Mason LastSavedBy: Douglas.Mason

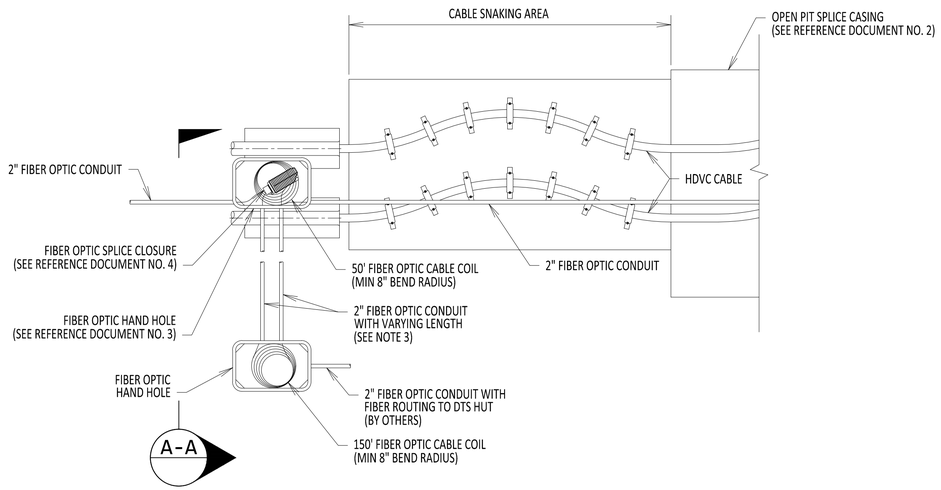

OPEN PIT DTS HUT CONNECTION
PLAN VIEW

SCALE: 1/4" = 1'-0"

NOTES:

1. MAINTAIN A MINIMUM FIBER OPTIC CABLE BEND RADIUS OF 8" UNLESS OTHERWISE STATED (WHEN BENDING THE CABLE).
2. SPLICES WITH DTS HUTS ARE ONLY AT DESIGNATED VAULTS/SPLICE LOCATIONS. SEE PLAN AND PROFILES FOR DETAILS.
3. SEE PLAN AND PROFILES FOR LATEST DISTANCES TO DTS HUT.

REFERENCE DOCUMENTS

LIST NO.	DOCUMENT NAME	DOCUMENT NO.
1	TYPICAL VAULT DETAILS	C-802
2	TYPICAL OPEN PIT SPLICE DETAILS	C-808
3	FIBER OPTIC HAND HOLE DETAILS	C-854
4	FIBER OPTIC SPLICE DETAILS	C-855
5	FIBER OPTIC H-FRAME BRACKET DETAILS	C-856

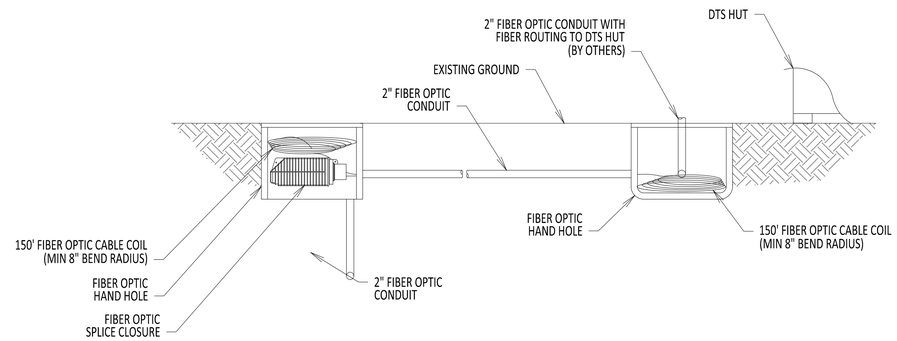

SECTION A-A

SCALE: 1/2" = 1'-0"

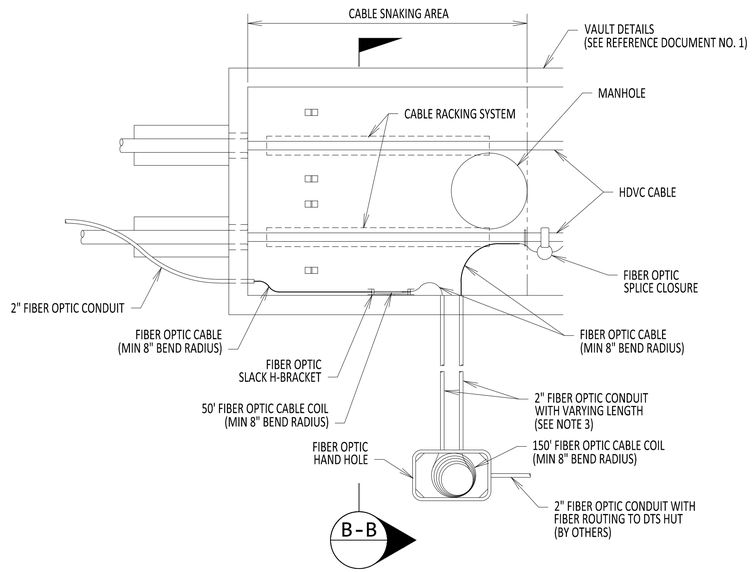

ENCLOSED VAULT DTS HUT CONNECTION
PLAN VIEW

SCALE: 1/4" = 1'-0"

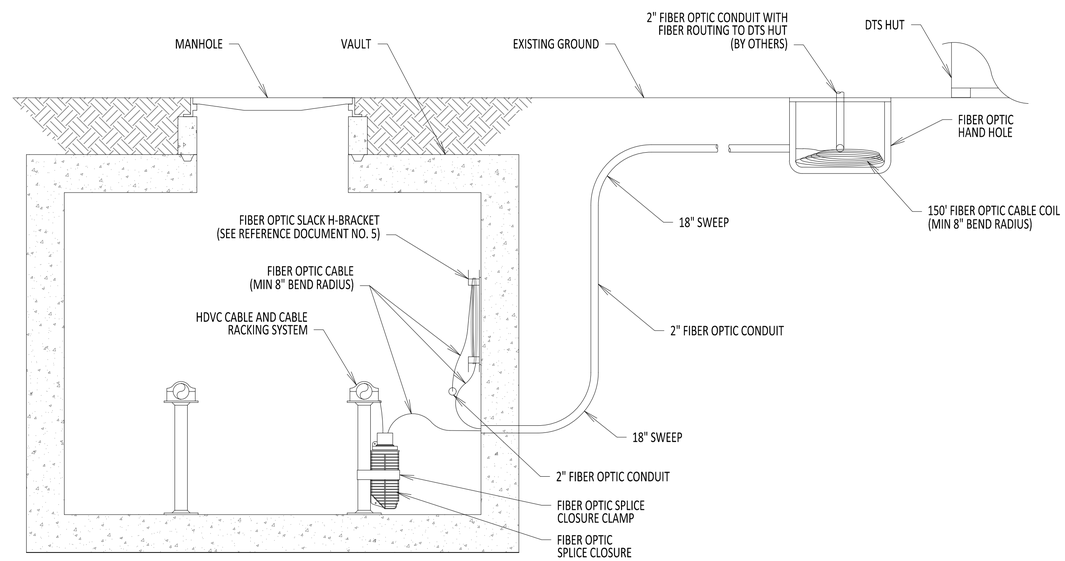

SECTION B-B

SCALE: 1/2" = 1'-0"

CHPE Champlain Hudson Power Express

Kiewit

STATE OF NEW YORK · MICHAEL REIHS WHEELER · 103646 · LICENSED PROFESSIONAL ENGINEER

IT IS A VIOLATION OF LAW FOR ANY PERSON, UNLESS THEY ARE ACTING UNDER THE DIRECTION OF A LICENSED PROFESSIONAL ENGINEER, ARCHITECT, LANDSCAPE ARCHITECT OR LAND SURVEYOR TO ALTER AN ITEM IN ANY WAY. IF AN ITEM BEARING THE STAMP OF A LICENSED PROFESSIONAL IS ALTERED, THE ALTERING ENGINEER, ARCHITECT, LANDSCAPE ARCHITECT OR LAND SURVEYOR SHALL STAMP THE DOCUMENT AND INCLUDE THE NOTATION "ALTERED BY" FOLLOWED BY THEIR SIGNATURE, THE DATE OF SUCH ALTERATION, AND A SPECIFIC DESCRIPTION OF THE ALTERATION.

No.	DATE	SUBMITTAL / REVISION DESCRIPTION	DB	APP
0	06/08/2023	ISSUED FOR CONSTRUCTION SUBMISSION	DLM	ASM

CHAMPLAIN HUDSON POWER EXPRESS

DTS HUT CONNECTION
FIBER OPTIC SPLICE AND HAND HOLE

DRAWN BY: DLM DESIGNED BY: NM APPROVED BY: MK SCALE REV. NO. 0

KIEWIT PROJECT NO. 21162
CHA PROJECT NO. 066076
DRAWING NO. **C-851**
DATE 06/08/2023
SH.NO. OF

File: R:\INFO\PD\UGX STANDARDS\UNDERGROUND SHAREPOINT\PROJECTS\CHPE 400KV DC\WORKING FOLDER\DWG\C-851-DTS_SPLICE-HUT.DWG Saved: 5/22/2023 2:07:04 PM Plotted: 6/5/2023 9:42:37 AM Current User: Douglas.Mason LastSavedBy: Douglas.Mason

NOTES:

1. ADD HAND HOLE TO ALL OPEN SPLICE LOCATIONS.
2. FIBER OPTIC SPLICE CLOSURE ONLY AT SPECIFIC LOCATIONS. SEE PLAN AND PROFILE FOR DETAILS.
3. SEE REFERENCE DOCUMENTS 2 FOR HAND HOLE LOCATION DETAILS.
4. SEE REFERENCE DOCUMENT 4 FOR FIBER OPTIC HAND HOLE DETAILS.
5. MAINTAIN A MINIMUM FIBER OPTIC CABLE BEND RADIUS OF 8" UNLESS OTHERWISE STATED (WHEN BENDING THE CABLE).

REFERENCE DOCUMENTS

LIST NO.	DOCUMENT NAME	DOCUMENT NO.
1	FRP FIBER COMMUNICATION HAND HOLE	S-771
2	TYPICAL OPEN PIT SPLICE DETAILS	C-808
3	DTS HUT CONNECTION FIBER OPTIC SPLICE AND HAND HOLE	C-851
4	FIBER OPTIC HAND HOLE DETAILS	C-854
5	FIBER OPTIC SPLICE DETAILS	C-855

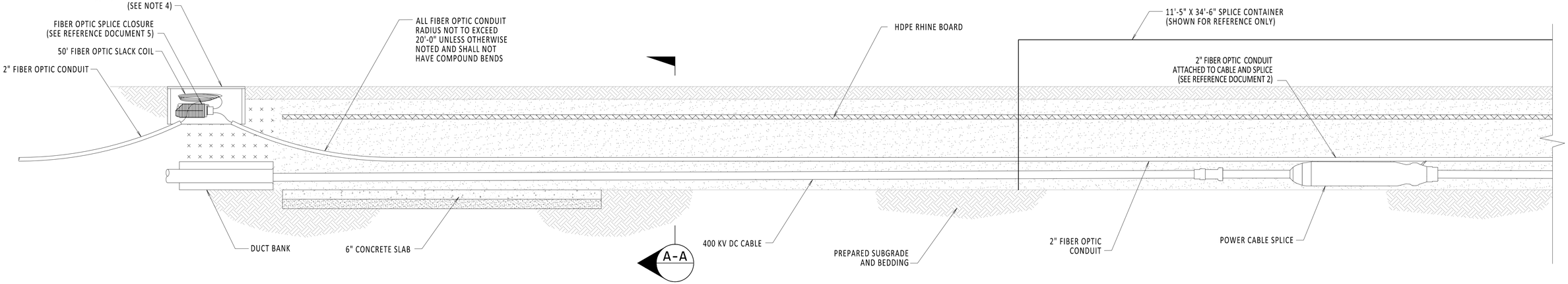

OPEN SPLICE w/ HAND HOLE PROFILE VIEW

SCALE: 3/8" = 1'-0"

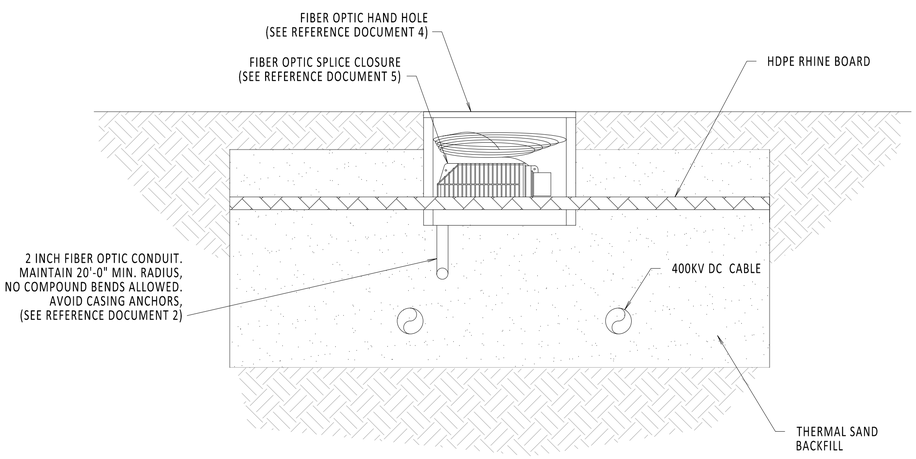

SECTION A-A

SCALE: 3/4" = 1'-0"

CHPE Champlain Hudson Power Express

Kiewit

STATE OF NEW YORK · MICHAEL REIHS WHEELER · 103646 · LICENSED PROFESSIONAL ENGINEER

IT IS A VIOLATION OF LAW FOR ANY PERSON, UNLESS THEY ARE ACTING UNDER THE DIRECTION OF A LICENSED PROFESSIONAL ENGINEER, ARCHITECT, LANDSCAPE ARCHITECT OR LAND SURVEYOR TO ALTER AN ITEM IN ANY WAY. IF AN ITEM BEARING THE STAMP OF A LICENSED PROFESSIONAL IS ALTERED, THE ALTERING ENGINEER, ARCHITECT, LANDSCAPE ARCHITECT OR LAND SURVEYOR SHALL STAMP THE DOCUMENT AND INCLUDE THE NOTATION "ALTERED BY" FOLLOWED BY THEIR SIGNATURE, THE DATE OF SUCH ALTERATION, AND A SPECIFIC DESCRIPTION OF THE ALTERATION.

No.	DATE	SUBMITTAL / REVISION DESCRIPTION	DB	APP
0	06/08/2023	ISSUED FOR CONSTRUCTION SUBMISSION	DLM	ASM

CHAMPLAIN HUDSON POWER EXPRESS

OPEN SPLICE w/ FIBER OPTICS HAND HOLE

DRAWN BY: TJMC | DESIGNED BY: MK | APPROVED BY: XX | SCALE | REV. NO. 0

KIEWIT PROJECT NO. 21162
CHA PROJECT NO. 066076
DRAWING NO. **C-853**
DATE 06/08/2023
SH.NO. OF

File: R:\INFO\PD\UGX STANDARDS\UNDERGROUND SHAREPOINT\PROJECTS\CHPE 400KV DC\WORKING FOLDER\DWG\C-853-OPEN_VAULT.DWG Saved: 6/5/2023 9:52:32 AM Plotted: 6/6/2023 1:53:20 PM Current User: Douglas.Mason LastSavedBy: Douglas.Mason

NOTES:

1. FIBER OPTIC COIL TO BE PLACED IN BOTTOM OF HAND HOLE. OBSERVE MINIMUM BEND RADIUS.
2. SPLICE ALL FIBERS STRAIGHT THROUGH.
3. FIBER OPTIC SPLICE CLOSURE ONLY AT SPECIFIC LOCATIONS. SEE PLAN AND PROFILE FOR DETAILS.
4. GROUNDING REQUIREMENTS TO BE DETERMINED.
5. HAND HOLE AT ALL OPEN SPLICE LOCATIONS. SEE REFERENCE DOCUMENTS 1 AND 2 FOR DETAILS ON HAND HOLE PLACEMENT IN OPEN PIT.
6. DRILLED HOLES ARE INTENDED TO ROUTE FIBER OPTIC CONDUIT AND CAN BE DRILLED AND SEALED ON ANY SIDE OF HAND HOLE AS REQUIRED BY THE FIELD.

REFERENCE DOCUMENTS

LIST NO.	DOCUMENT NAME	DOCUMENT NO.
1	TYPICAL OPEN PIT SPLICE DETAILS	C-808
2	OPEN VAULT w/FIBER OPTIC HAND HOLE	C-853
3	FIBER OPTIC SPLICE DETAILS	C-855
4	HUBBELL QUAZITE (HAND HOLE)	MODEL NO. PG3048BA24

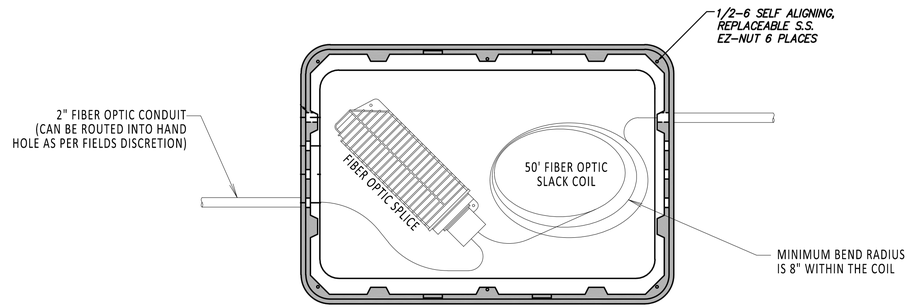

HAND HOLE
TOP VIEW
NOT TO SCALE

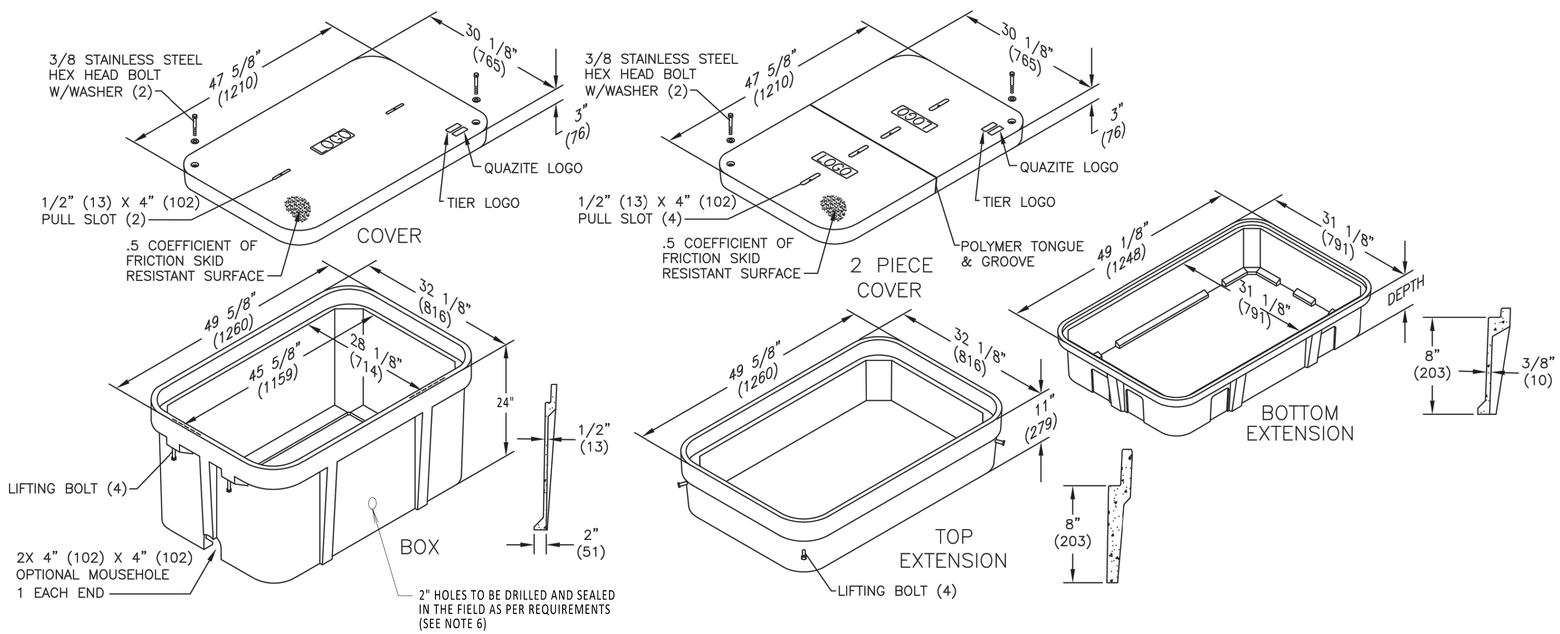

ISOMETRIC VIEW
NOT TO SCALE

CHPE Champlain Hudson Power Express

Kiewit

STATE OF NEW YORK · MICHAEL REIHS WHEELER · 103646 · LICENSED PROFESSIONAL ENGINEER

IT IS A VIOLATION OF LAW FOR ANY PERSON, UNLESS THEY ARE ACTING UNDER THE DIRECTION OF A LICENSED PROFESSIONAL ENGINEER, ARCHITECT, LANDSCAPE ARCHITECT OR LAND SURVEYOR TO ALTER AN ITEM IN ANY WAY. IF AN ITEM BEARING THE STAMP OF A LICENSED PROFESSIONAL IS ALTERED, THE ALTERING ENGINEER, ARCHITECT, LANDSCAPE ARCHITECT OR LAND SURVEYOR SHALL STAMP THE DOCUMENT AND INCLUDE THE NOTATION "ALTERED BY" FOLLOWED BY THEIR SIGNATURE, THE DATE OF SUCH ALTERATION, AND A SPECIFIC DESCRIPTION OF THE ALTERATION.

No.	DATE	SUBMITTAL / REVISION DESCRIPTION	DB	APP
0	06/08/2023	ISSUED FOR CONSTRUCTION SUBMISSION	DLM	ASM

CHAMPLAIN HUDSON POWER EXPRESS

FIBER OPTIC HAND HOLE DETAILS

DRAWN BY: DLM | DESIGNED BY: NM | APPROVED BY: MK | SCALE | REV. NO. 0

KIEWIT PROJECT NO. 21162
CHA PROJECT NO. 066076
DRAWING NO. **C-854**
DATE 06/08/2023
SH.NO. OF

File: R:\INFO\PD\UGX STANDARDS\UNDERGROUND SHAREPOINT\PROJECTS\CHPE 400KV DC\WORKING FOLDER\DWG\C-854-HAND_HOLE.DWG Saved: 5/5/2023 2:35:49 PM Plotted: 6/5/2023 9:52:04 AM Current User: Douglas.Mason LastSavedBy: Douglas.Mason