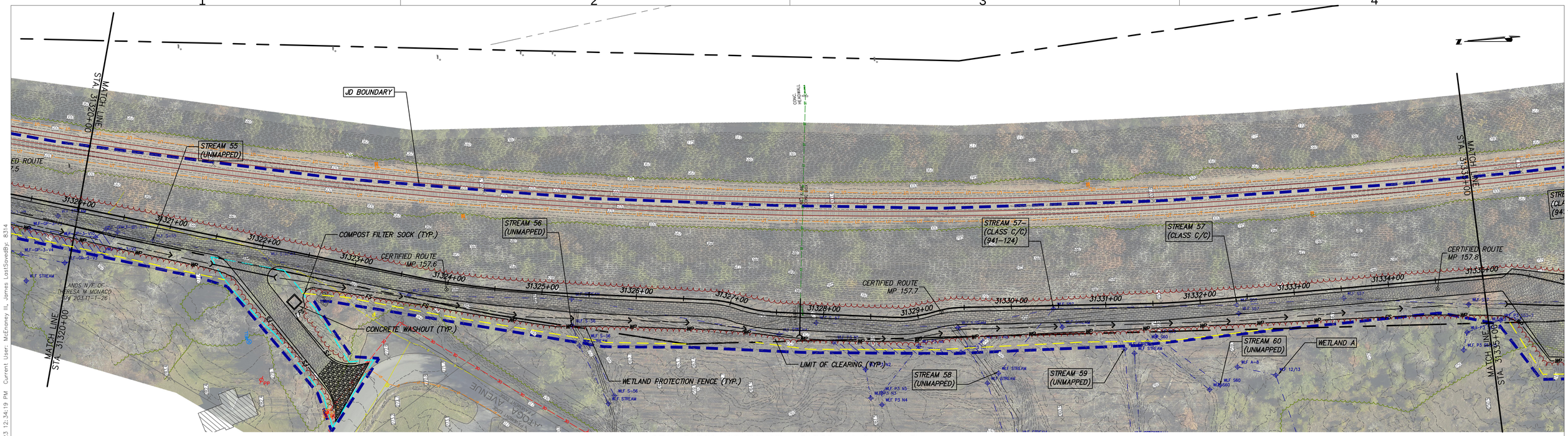

STA. 31320+00 TO STA. 31335+00 PLAN VIEW

SCALE: 1" = 50'

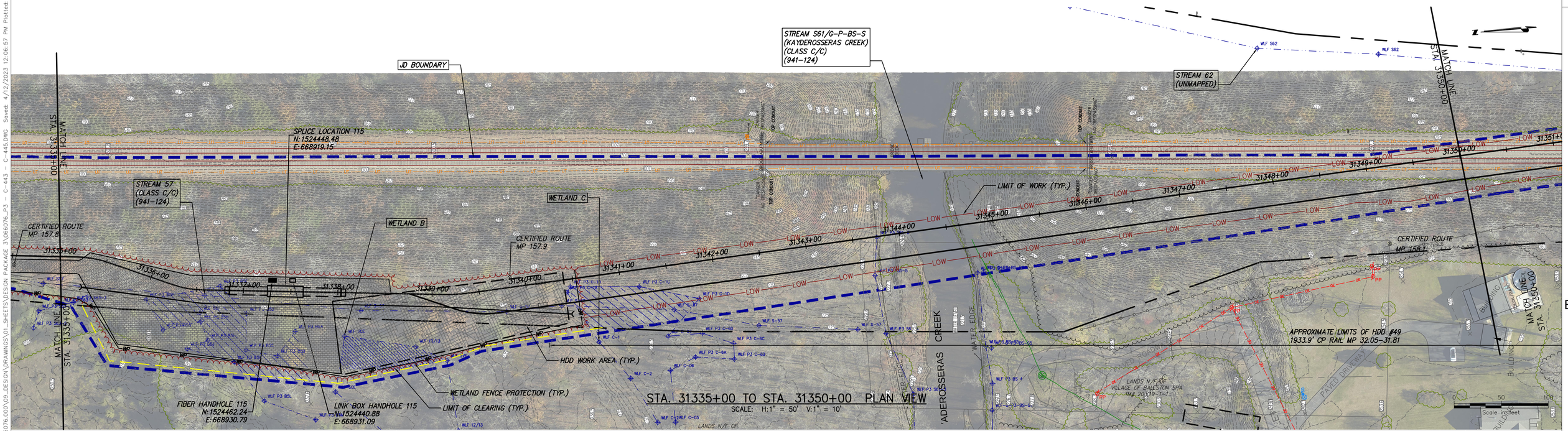

STA. 31335+00 TO STA. 31350+00 PLAN VIEW

SCALE: H:1" = 50' V:1" = 10'

CHPE Champlain Hudson Power Express

Kiewit

CHA
III Winners Circle, PO Box 5269
Albany, NY 12205-0269
518.453.4500 . www.chacompanies.com

No.	DATE	SUBMITTAL / REVISION DESCRIPTION	DB	APP
0	04/05/2023	FINAL EM&CP SUBMISSION	JJE	JPR

CHAMPLAIN HUDSON POWER EXPRESS
SEGMENTS 4 & 5 (PACKAGE 3) - CP: FORT EDWARD TO MILTON
STA. 31320+00 TO STA. 31350+00 EROSION AND SEDIMENT CONTROL PLAN

KIEWIT PROJECT NO. 21162
CHA PROJECT NO. 066076
DRAWING NO. C-445

DRAWN BY: JJE | DESIGNED BY: JTM | APPROVED BY: JPR | SCALE: AS NOTED | REV. NO. X | DATE 04/05/2023 | SH.NO.

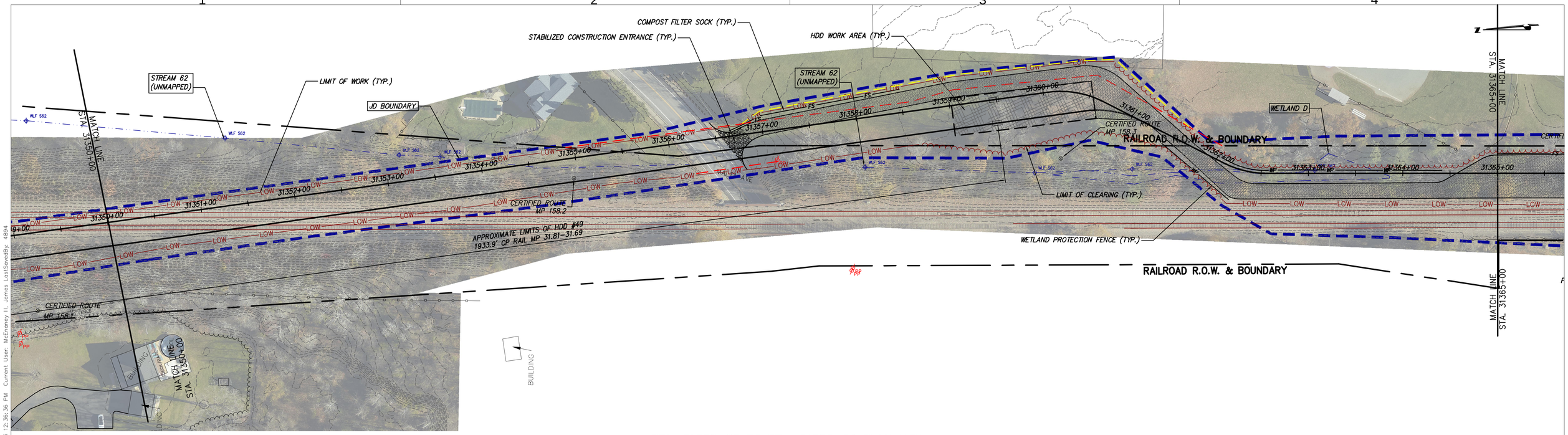

STA. 31350+00 TO STA. 31365+00 PLAN VIEW

SCALE: 1" = 50'

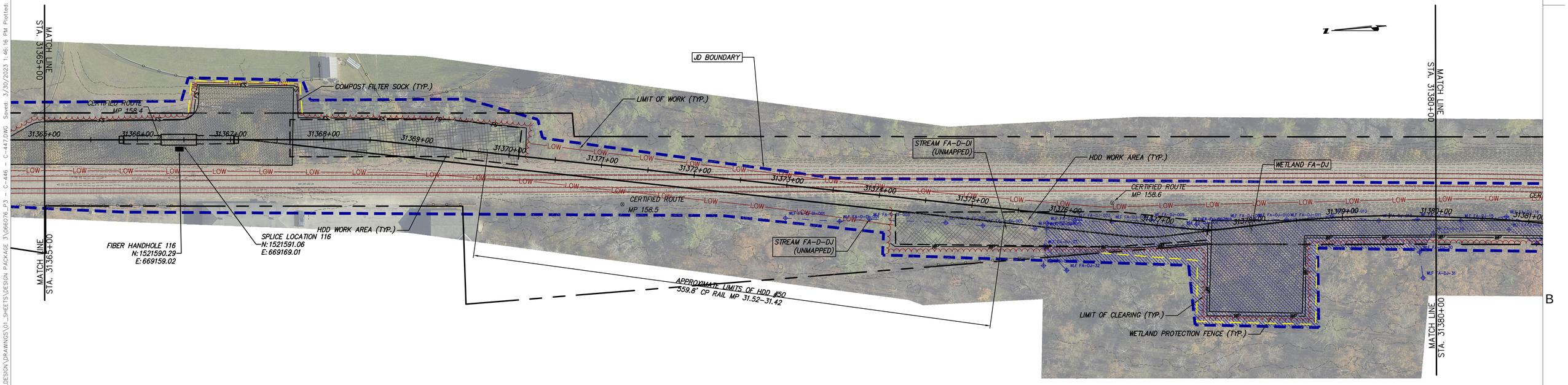

STA. 31365+00 TO STA. 31380+00 PLAN VIEW

SCALE: H:1" = 50' V:1" = 10'

CHPE Champlain Hudson Power Express

Kiewit

CHA
III Winners Circle, PO Box 5269
Albany, NY 12205-0269
518.453.4500 . www.chacompanies.com

No.	DATE	SUBMITTAL / REVISION DESCRIPTION	DB	APP
0	04/05/2023	FINAL EM&CP SUBMISSION	JJE	JPR

CHAMPLAIN HUDSON POWER EXPRESS

SEGMENTS 4 & 5 (PACKAGE 3) - CP: FORT EDWARD TO MILTON

STA. 31350+00 TO STA. 31380+00 EROSION AND SEDIMENT CONTROL PLAN

KIEWIT PROJECT NO. 21162

CHA PROJECT NO. 066076

DRAWING NO. C-446

DRAWN BY: JJE DESIGNED BY: JTM APPROVED BY: JPR

SCALE AS NOTED DATE 04/05/2023

REV. NO. X SH.NO.

File: V:\PROJECTS\ANY\K6\066076.000\09_DESIGN\DRAWINGS\01_SHEETS\DESIGN PACKAGE 3\066076_P3 - C-446 - C-447.DWG Saved: 3/30/2023 1:46:16 PM Plotted: 4/12/2023 12:36:36 PM Current User: McEnaney III, James LastSavedBy: 4934

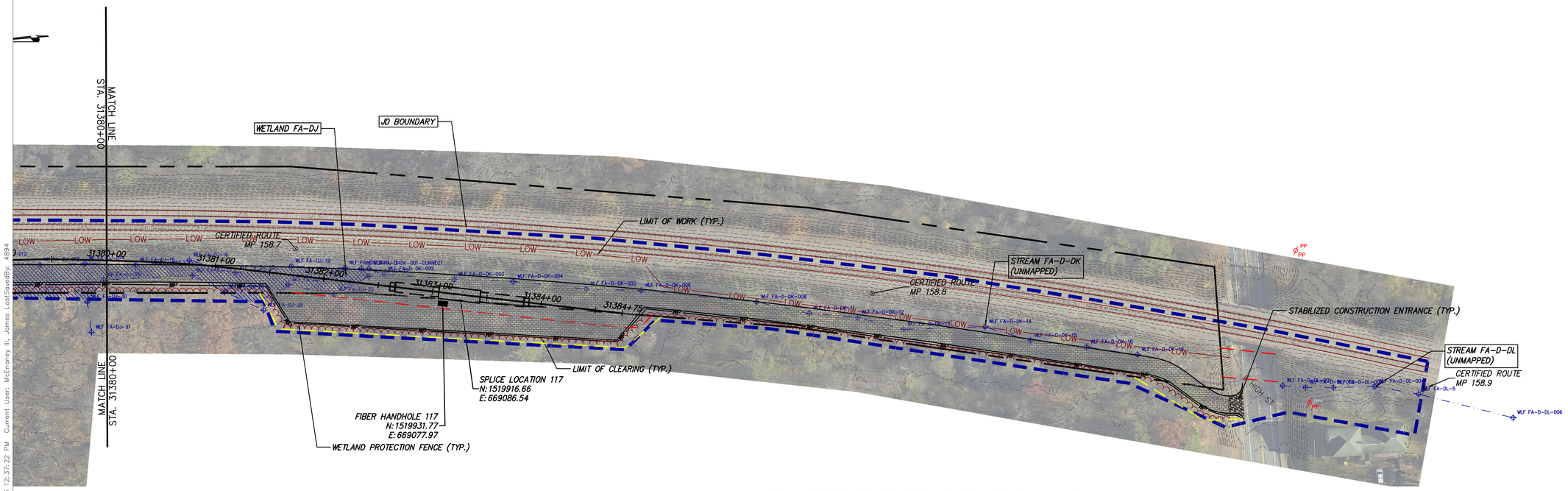

STA. 31380+00 TO STA. 31384+30 PLAN VIEW

SCALE: 1" = 50'

0 50 100
Scale in feet

File: V:\PROJECTS\ANY\K0\066076.000\09_DESIGN\DRAWINGS\01_SHEETS\DESIGN PACKAGE 3\066076_P3 - C-446 - C-447.DWG Saved: 3/30/2023 1:46:16 PM Plotted: 4/12/2023 12:37:22 PM Current User: McEnaney III, James LastSavedBy: 4894

CHPE Champlain Hudson Power Express

Kiewit

CHA
III Winners Circle, PO Box 5269
Albany, NY 12205-0269
518.453.4500 . www.chacompanies.com

No.	DATE	SUBMITTAL / REVISION DESCRIPTION	DB	APP
0	04/05/2023	FINAL EM&CP SUBMISSION	JJE	JPR

CHAMPLAIN HUDSON POWER EXPRESS
SEGMENTS 4 & 5 (PACKAGE 3) - CP: FORT EDWARD TO MILTON
STA. 31380+00 TO STA. 31384+30 EROSION AND SEDIMENT CONTROL PLAN

DRAWN BY: JJE | DESIGNED BY: JTM | APPROVED BY: JPR | SCALE AS NOTED | REV. NO. X | DATE 04/05/2023 | SH.NO.

KIEWIT PROJECT NO. 21162
CHA PROJECT NO. 066076
DRAWING NO. C-447

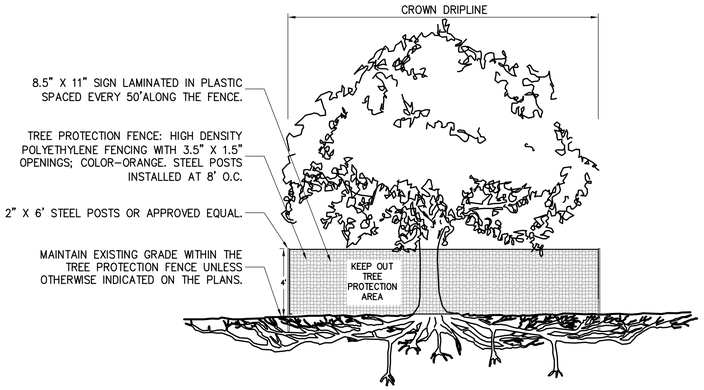

NOTES:
1. CONTRACTOR TO MAINTAIN INTEGRITY OF CONSTRUCTION FENCE FOR DURATION OF PROJECT.
2. NO PRUNING SHALL BE PERFORMED EXCEPT BY APPROVED ARBORIST.
3. NO EQUIPMENT SHALL OPERATE INSIDE THE PROTECTIVE FENCING INCLUDING DURING FENCE INSTALLATION AND REMOVAL.
4. SEE EROSION CONTROL PLANS FOR LOCATIONS OF TREE PROTECTION AREAS.

1 TREE PROTECTION
NOT TO SCALE

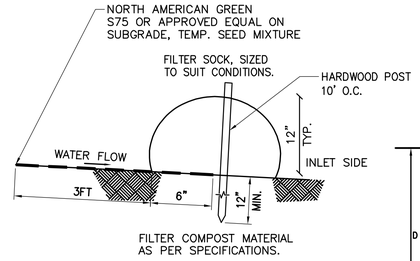

NOTES:
1. ALL MATERIAL TO MEET MANUFACTURER SPECIFICATIONS.
2. ALL FILTER SOCKS SHALL BE 12" DIAMETER OR LARGER.
3. THE CONTRACTOR SHALL MAINTAIN THE COMPOST FILTER BERM IN A FUNCTIONAL CONDITION AT ALL TIMES AND IT SHALL BE ROUTINELY INSPECTED.
4. WHERE THE BERM REQUIRES REPAIR, IT WILL BE ROUTINELY REPAIRED.
5. THE CONTRACTOR SHALL REMOVE SEDIMENTS COLLECTED AT THE BASE OF THE BERM WHEN THEY REACH 1/3 OF THE EXPOSED HEIGHT OF THE BERM, OR AS DIRECTED BY THE OWNERS.
6. THE COMPOST FILTER BERM WILL BE REMOVED ON SITE WHEN NO LONGER REQUIRED, AS DETERMINED BY THE OWNERS.
7. INSTALL PERPENDICULAR TO FLOW.

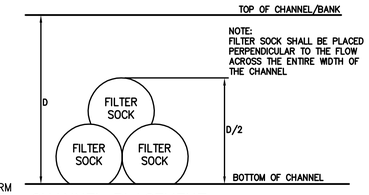

CHANNEL PLACEMENT

MAINTENANCE NOTES:
1. TRAFFIC SHALL NOT BE PERMITTED TO CROSS FILTER SOCKS.
2. ACCUMULATED SEDIMENT SHALL BE REMOVED WHEN IT REACHES $\frac{1}{3}$ OF THE EXPOSED HEIGHT OF THE PRACTICE AND DISPOSED OF IN ACCORDANCE WITH THE SWPPP.
3. SOCKS SHALL BE INSPECTED WEEKLY AND AFTER EACH RUNOFF EVENT. DAMAGED SOCKS SHALL BE REPAIRED IN THE MANNER REQUIRED BY THE MANUFACTURER OR REPLACED WITHIN 24 HOURS OF INSPECTION NOTIFICATION.
4. BIODEGRADABLE FILTER SOCKS SHALL BE REPLACED AFTER 6 MONTHS; PHOTO-DEGRADABLE FILTER SOCKS AFTER 1 YEAR. POLY-PROPYLENE SOCKS SHALL BE REPLACED ACCORDING TO THE MANUFACTURER'S RECOMMENDATIONS.
5. UPON STABILIZATION OF THE AREA CONTRIBUTORY TO THE SOCK, STAKES SHALL BE REMOVED. THE SOCK SHALL BE REMOVED. FOR REMOVAL THE MESH CAN BE CUT AND COMPOST SPREAD AS AN ADDITIONAL MULCH TO ACT AS A SOIL SUPPLEMENT.

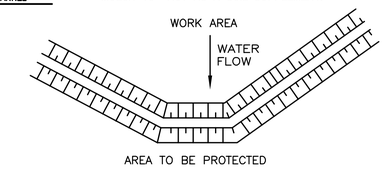

AT GRADE PLACEMENT

2 COMPOST FILTER SOCK DETAIL
SCALE: N.T.S.

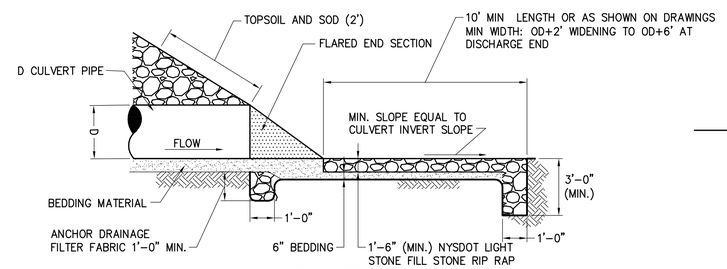

TYPICAL OUTFALL

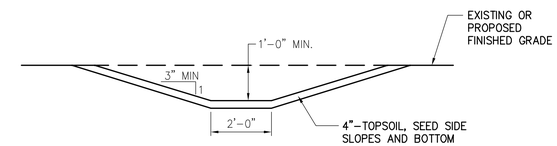

5 TYPICAL GRASS DRAINAGE SWALE
SCALE: N.T.S.

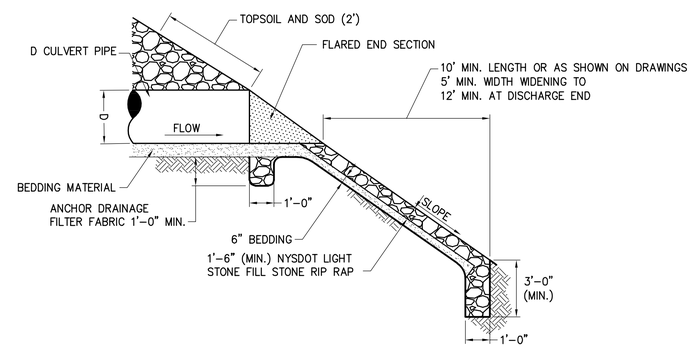

TYPICAL OUTFALL ON SLOPE

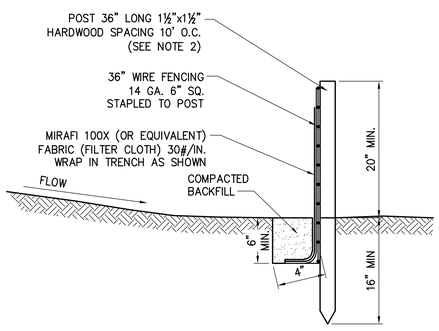

NOTES:

1. TIE FABRIC TO WIRE FENCE IN ACCORDANCE WITH MANUFACTURERS RECOMMENDATIONS.
2. IF EXTRA STRENGTH FABRIC (GREATER THAN 50#/INCH) IS USED, WIRE CAN BE DELETED IF POST SPACING IS REDUCED TO 6' O.C.
3. AT THE ENDS OF THE FENCING THE FIRST 20' SHALL BE TURNED UP THE SLOPE 2'.
4. POSTS SHOULD BE INCLINED TOWARD THE DIRECTION FLOW CAME FROM.
5. OVERLAP FABRIC A MINIMUM OF 6" AND FOLDED AT JOINTS. ATTACH FILTER FABRIC TO STAKES ALLOWING EXTENSION INTO TRENCH AS SHOWN; SECURE TO STAKES AS NOTED.
6. THE MAXIMUM AREA OF RUNOFF PER 100LF. OF FENCE SHALL NOT EXCEED 0.25 ACRES.
7. MAINTENANCE SHALL BE PERFORMED AS NECESSARY. THE FENCING SHALL BE CHECKED AFTER EVERY STORM TO ENSURE THEIR PROPER FUNCTIONING.
8. WHEN FENCE IS NO LONGER NEEDED, THE ACCUMULATED SILT, THE POSTS AND FABRIC SHALL BE REMOVED AND TRENCH BACK FILLED WITH TOPSOIL AND SEEDED.
9. FENCING SHOULD BE PLACED AS SHOWN ON THE DRAWING OR IF NOT SHOWN, 10' BEYOND THE TOE OF THE SLOPE AND AT A SPACING IN ACCORDANCE WITH THE TABLE.
10. EXCAVATE TRENCH AS PER DETAIL AND SET POSTS AT 10' O.C.
11. BACKFILL WITH COMPACTED, EXCAVATED SOIL FROM TRENCH.

3 SILT FENCE
SCALE: N.T.S.

4 TYPICAL CULVERT OUTFALL RIP RAP
SCALE: N.T.S.

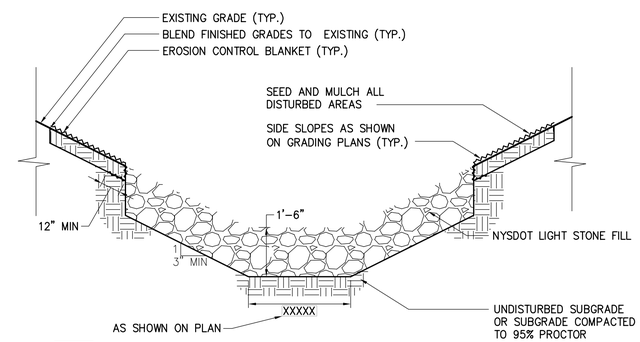

6 LIGHT STONE-LINED DRAINAGE CHANNEL
SCALE: N.T.S.

CHPE Champlain Hudson Power Express

Kiewit

CHA
III Winners Circle, PO Box 5269
Albany, NY 12205-0269
518.453.4500 . www.chacompanies.com

No.	DATE	SUBMITTAL / REVISION DESCRIPTION	DB	APP
0	04/05/2023	FINAL EM&CP SUBMISSION	JJE	JPR

CHAMPLAIN HUDSON POWER EXPRESS
SEGMENTS 4 & 5 (PACKAGE 3) - CP: FORT EDWARD TO MILTON
EROSION AND SEDIMENT CONTROL DETAILS

KIEWIT PROJECT NO.	21162
CHA PROJECT NO.	066076
DRAWING NO.	C-601

DRAWN BY: JJE | DESIGNED BY: JTM | APPROVED BY: JPR | SCALE AS NOTED | REV. NO. X | DATE 04/05/2023 | SH.NO.

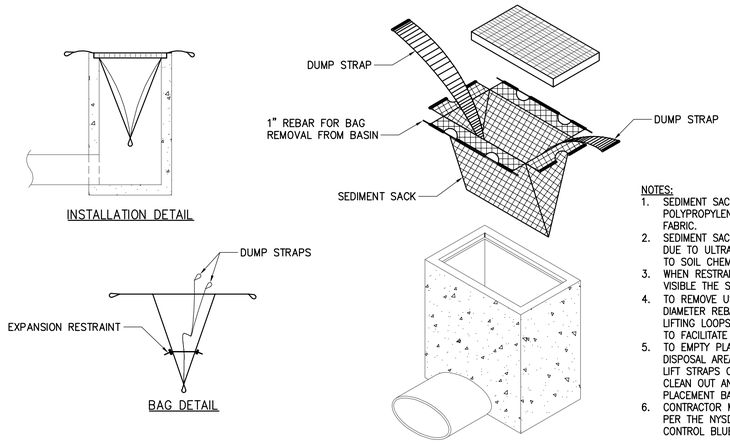

NOTES:
1. SEDIMENT SACK IS TO BE MADE WITH A POLYPROPYLENE WOVEN MONOFILAMENT FABRIC.
2. SEDIMENT SACK SHALL RESIST DEGRADATION DUE TO ULTRAVIOLET LIGHT, BE RESISTANT TO SOIL CHEMICALS, MILDEW AND INSECTS.
3. WHEN RESTRAINT CORD IS NO LONGER VISIBLE THE SACK SHOULD BE EMPTIED.
4. TO REMOVE USE (2) PIECES OF 1" DIAMETER REBAR AND PLACE THROUGH THE LIFTING LOOPS ON EACH SIDE OF THE SACK TO FACILITATE LIFTING.
5. TO EMPTY PLACE UNIT IN APPROVED DISPOSAL AREA. PLACE REBAR THROUGH THE LIFT STRAPS ON THE BOTTOM AND LIFT. CLEAN OUT AND RINSE SACK PRIOR TO PLACEMENT BACK IN THE BASIN.
6. CONTRACTOR MAY USE AN APPROVED EQUAL PER THE NYSDEC EROSION AND SEDIMENT CONTROL BLUE BOOK.

1 INLET PROTECTION
SCALE: N.T.S.

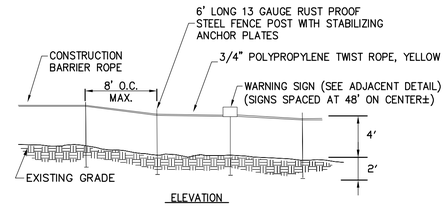

1. CONSTRUCTION BARRIER FENCE SHALL BE INSTALLED IN THE LOCATIONS SHOWN ON THE PLANS PRIOR TO BEGINNING ANY WORK ADJACENT TO THESE AREAS.
2. THE CONTRACTOR SHALL INSTALL AT THE BEGINNING OF THE CONTRACT, AND MAINTAIN THROUGHOUT ITS DURATION.

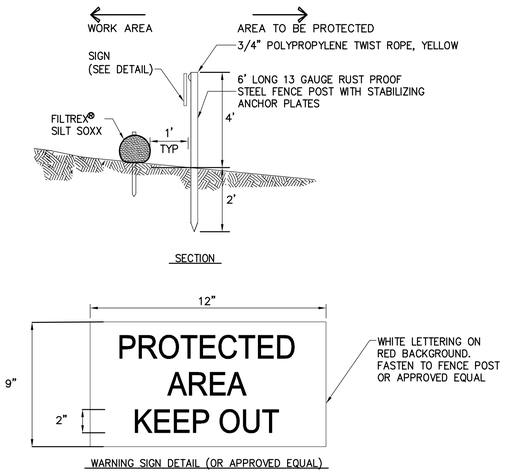

2 WETLAND PROTECTION FENCE
SCALE: N.T.S.

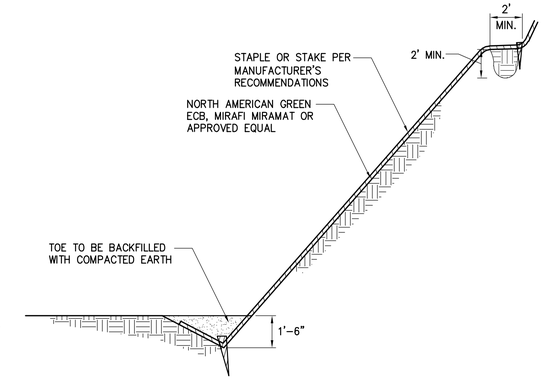

NOTE:
EROSION CONTROL BLANKETS TO BE INSTALLED ON SLOPES 3:1 OR GREATER (TYP.)

3 EROSION CONTROL BANK STABILIZATION DETAIL
SCALE: N.T.S.

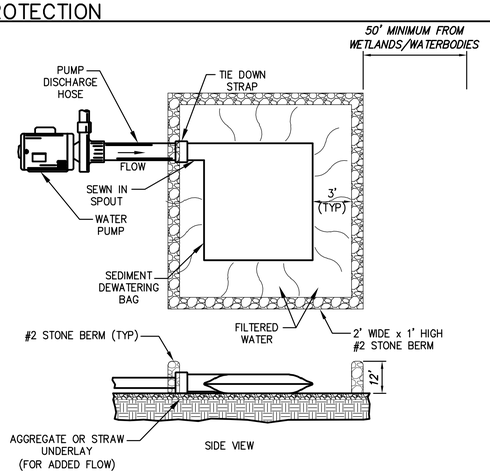

NOTE: THE SEDIMENT DEWATERING BAG WILL BE MANUFACTURED IN THE U.S.A. FROM A NONWOVEN POLYPROPYLENE FABRIC THAT MEETS OR EXCEEDS THE FOLLOWING SPECIFICATIONS:

SEDIMENT DEWATERING BAG SPECIFICATIONS

Mechanical Properties	Test Method	Units	MARV
Grab Tensile Strength	ASTM D 4632	kN (lbs)	0.9 (205) x 0.9 (205)
Grab Tensile Elongation	ASTM D 4632	%	50 x 50
Puncture Strength	ASTM D 4833	kN (lbs)	0.58 (130)
Mullen Burst Strength	ASTM D 3786	kPa (psi)	2618 (380)
Trapezoid Tear Strength	ASTM D 4533	kN (lbs)	0.36 (80) X 0.36 (80)
UV Resistence	ASTM D 4355	%	70
Apparent Opening Size	ASTM D 4751	Mm (US Std Sieve)	0.180 (80)
Flow Rate	ASTM D 4491	1/min/m² (gal/min/ft²)	3866 (95)
Permittivity	ASTM D 4491	Sec⁻¹	1.2

4 SEDIMENT DEWATERING BAG
SCALE: N.T.S.

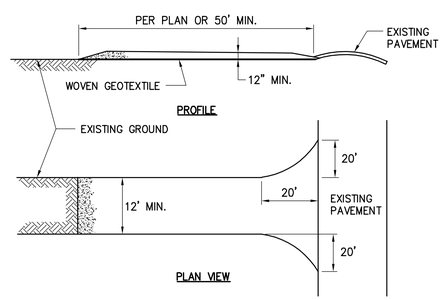

1. STONE SIZE–USE AASHTO M43 SIZE 3 COARSE AGGREGATE, OR RECLAIMED OR RECYCLED CONCRETE EQUIVALENT.
2. LENGTH – NOT LESS THAN 50 FEET (EXCEPT ON A SINGLE RESIDENCE LOT WHERE A 30 FOOT MINIMUM LENGTH WOULD APPLY).
3. THICKNESS – NOT LESS THAN 12".
4. WIDTH – TWELVE (12) FOOT MINIMUM, BUT NOT LESS THAN THE FULL WIDTH AT POINTS WHERE INGRESS OR EGRESS OCCURS. TWENTY–FOUR (24) FOOT IF SINGLE ACCESS TO SITE.
5. WOVEN GEOTEXTILE FABRIC WILL BE PLACED OVER THE ENTIRE AREA PRIOR TO PLACING OF STONE.
6. EXISTING ROAD SIDE DRAINAGE SHALL BE MAINTAINED.
7. SURFACE WATER – ALL SURFACE WATER FLOWING OR DIVERTED TOWARD CONSTRUCTION ENTRANCES SHALL BE PIPED BENEATH THE ENTRANCE. IF PIPING IS IMPRACTICAL, A MOUNTABLE BERM WITH 5:1 SLOPES WILL BE PERMITTED.
8. MAINTENANCE–THE ACCESS SHALL BE MAINTAINED IN A CONDITION WHICH WILL PREVENT TRACKING OR FLOWING OF SEDIMENT ONTO PUBLIC RIGHTS–OF–WAY. THIS MAY REQUIRE PERIODIC TOP DRESSING WITH ADDITIONAL STONE AS CONDITIONS DEMAND AND REPAIR AND/OR CLEANOUT OF ANY MEASURES USED TO TRAP SEDIMENT. ALL SEDIMENT OR STONE SPILLED, DROPPED, WASHED, OR TRACKED ONTO PUBLIC RIGHTS–OF–WAY MUST BE REMOVED IMMEDIATELY.
9. WHEN WASHING IS REQUIRED, IT SHALL BE DONE ON A AREA STABILIZED WITH STONE AND WHICH DRAINS INTO AN APPROVED SEDIMENT TRAPPING DEVICE.
10. PERIODIC INSPECTION AND NEEDED MAINTENANCE SHALL BE PROVIDED AFTER EACH RAIN.

5 STABILIZED CONSTRUCTION ACCESS
SCALE: N.T.S.

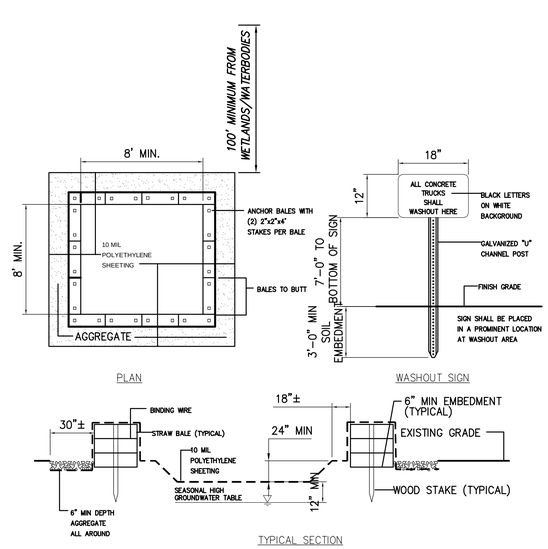

MAINTENANCE NOTES:
1. ALL CONCRETE WASHOUT FACILITIES SHALL BE INSPECTED DAILY. DAMAGED OR LEAKING FACILITATES SHALL BE DEACTIVATED AND REPAIRED OR REPLACED IMMEDIATELY. EXCESS RAINWATER THAT HAS ACCUMULATED OVER HARDENED CONCRETE SHALL BE PUMPED TO A STABILIZED AREA SUCH AS A GRASS FILTER STRIP.
2. ACCUMULATED HARDENED MATERIAL SHALL BE REMOVED WHEN 75% OF THE STORAGE CAPACITY OF THE STRUCTURE IS FILLED. ANY EXCESS WASH WATER SHALL BE PUMPED INTO A CONTAINMENT VESSEL AND PROPERLY DISPOSED OF OFF SITE.
3. DISPOSAL OF THE HARDENED MATERIAL SHALL BE OFF–SITE IN A CONSTRUCTION/DEMOLITION LANDFILL.
4. THE PLASTIC LINER SHALL BE REPLACED WITH EACH CLEANING OF THE WASHOUT FACILITY.
5. INSPECT THE PROJECT SITE FREQUENTLY TO ENSURE THAT NO CONCRETE DISCHARGES ARE TAKING PLACE IN NON–DESIGNATED AREAS.
6. LOCATION(S) TO BE DETERMINED IN THE FIELD BY THE OWNER'S REPRESENTATIVE
7. CONCRETE WASHOUTS SHALL NOT BE LOCATED WITHIN 200' OF ANY KNOWN WELL.

6 CONCRETE WASHOUT AREA
SCALE: N.T.S.

CHPE Champlain Hudson Power Express

Kiewit

CHA
III Winners Circle, PO Box 5269
Albany, NY 12205-0269
518.453.4500 . www.chacompanies.com

No.	DATE	SUBMITTAL / REVISION DESCRIPTION	DB	APP
0	04/05/2023	FINAL EM&CP SUBMISSION	JJE	JPR

CHAMPLAIN HUDSON POWER EXPRESS
SEGMENTS 4 & 5 (PACKAGE 3) - CP: FORT EDWARD TO MILTON
EROSION AND SEDIMENT CONTROL DETAILS

KIEWIT PROJECT NO. 21162
CHA PROJECT NO. 066076
DRAWING NO. C-602

DRAWN BY: JJE | DESIGNED BY: JTM | APPROVED BY: JPR | SCALE AS NOTED | REV. NO. X | DATE 04/05/2023 | SH.NO.

DEWATERING PLAN:
CONSTRUCTION ACTIVITY WITHIN THE STREAM SHALL BE PROHIBITED BETWEEN OCTOBER 1 THROUGH MAY 31 FOR ALL STREAMS DESIGNATED AS TROUT WATER OR SUITABLE FOR TROUT SPAWNING.

DEWATERING PROCEDURES:
TRAPPED WATER WITHIN THE TRENCH SHALL BE DISCHARGED INTO A PORTABLE SEDIMENT TANK OR SEDIMENT FILTER BAGS LOCATED AWAY FROM THE WATERBODY TO PREVENT SILT-LADEN WATER FROM FLOWING INTO THE WATERBODY.

DAM AND PUMP CROSSING PROCEDURES:
BEFORE THE INITIATION OF ANY IN-STREAM ACTIVITIES, ALL MATERIAL ASSOCIATED WITH THE DAM AND PUMP SITE SET-UP MUST BE ON-HAND. THESE MATERIALS INCLUDE, BUT ARE NOT LIMITED TO THE FOLLOWING:
A)WATER BARRIERS
B)DOWNSTREAM SPLASH PLATE
C)PUMPS (PRIMARY AND SECONDARY) AND HOSES
D)FUEL FOR PUMPS (STORED AT LEAST ONE HUNDRED (100) FEET FROM WATERBODY)
E)SPILL PREVENTION AND CONTROL MATERIALS (INCLUDING SECONDARY CONTAINMENT FOR PUMPS LOCATED WITHIN ONE HUNDRED (100) FEET OF WETLAND OR WATERBODY)

ONCE THE NECESSARY MATERIALS ARE ON-LOCATION, SITE SET-UP MAY BEGIN. THE FIRST STEP IS TO SELECT AN APPROPRIATE LOCATION FOR THE PUMP INTAKE HOSE(S) TO BE POSITIONED. DEPENDING UPON THE CHANNEL CHARACTERISTICS, EITHER A NATURALLY OCCURRING DEEP SPOT OR CHANNEL WILL BE SELECTED AS A "SUMP"OR A SUMP MAY NEED TO BE CREATED TO PROVIDE SUFFICIENT WATER DEPTH FOR THE SCREENED HOSE INTAKE(S). IF A NATURAL SUMP IS NOT AVAILABLE FOR THE INTAKE HOSE, AN IN-STREAM SUMP WILL BE CREATED BY EXCAVATING WITHIN THE STREAM CHANNEL AND SURROUNDING THE EXCAVATION USING SANDBAGS.

THE FOLLOWING BMPS SHALL BE IMPLEMENTED AT THE INTAKE OR SUMP SITE:
A)ALL EQUIPMENT, MATERIAL, AND CONSTRUCTION PERSONNEL NECESSARY FOR THE CROSSING SHALL BE ON-SITE BEFORE SET-UP BEGINS)UPON COMPLETION OF THE WATERBODY CROSSING ANY SANDBAGS UTILIZED FOR A SUMP SHALL BE REMOVED AND THE STREAM CHANNEL RESTORED TO PRE-CONSTRUCTION CONDITION
C)THE SUMP SHALL BE OF SUFFICIENT DEPTH TO PREVENT THE ENTRAINMENT OF EXCESSIVE AMOUNTS OF SEDIMENT INTO THE SUMP INTAKE, HOSE AND PUMP

DURING THE ASSEMBLY OF THE UPSTREAM AND DOWNSTREAM WATER BARRIERS, THE PUMPING NETWORK SHALL BE SETUP TO BEGIN THE TRANSFER OF WATER AROUND THE CONSTRUCTION WORK AREA.

THE PUMP INTAKE AND DISCHARGE HOSES SHALL BE APPROPRIATELY PLACED AND OF SUFFICIENT LENGTH, BASED UPON SITE-SPECIFIC CONDITIONS. THE INTAKE HOSE SHALL BE SCREENED TO PREVENT THE ENTRAINMENT OF FISH. DISCHARGE HOSES SHALL BE PROVIDED WITH SUPPORT OVER THE DITCH-LINE AS NEEDED TO PREVENT EXCESSIVE SAGGING AND REDUCTION OF PUMPING CAPACITY.

THE NUMBER AND SIZES OF PUMPS TO BE USED AT ANY CROSSING SHALL BE DEPENDENT UPON THE VOLUME OF WATER FLOWING AT THE TIME THE CROSSING IS MADE.

BMPS TO BE IMPLEMENTED DURING PUMP SET-UP INCLUDE:
A)PUMPS SHALL BE FUELED PRIOR TO PLACING THEM IN POSITION
B)IF IT IS NECESSARY TO REFUEL DURING THE PUMP OPERATION, EXTRA CARE SHALL BE TAKEN TO AVOID SPILLAGE AND SPILL CONTROL MATERIALS WILL BE READILY AVAILABLE ON SITE
C)SECONDARY CONTAINMENT SHALL BE PLACED UNDER THE PUMPS AS AN ADDITIONAL PRECAUTIONARY MEASURE TO PROTECT AGAINST ACCIDENTAL LEAKAGE OR SPILL
D)FUEL FOR FILLING THE PUMPS SHALL NOT BE STORED WITHIN ONE HUNDRED (100) FEET OF THE WATERBODY
E)THE INTAKE HOSE SHALL BE SCREENED TO PREVENT THE ENTRAINMENT OF FISH
F)THE END OF THE DISCHARGE HOSE SHALL BE MOUNTED UPON A SPLASH PLATE OR SIMILAR DEVICE OR IN A MANNER THAT WILL DISSIPATE THE ENERGY OF THE DISCHARGING WATER AND REDUCE OR ELIMINATE STREAMBED SCOUR
G)IF HOSES CROSS THE TEMPORARY ACCESS ROAD, THEY SHALL BE PROTECTED FROM TRAVELING EQUIPMENT
H)PUMP(S) SHALL BE OF SUFFICIENT CAPACITY TO TRANSFER TWICE THE CAPACITY OF THE ENTIRE STREAMFLOW AROUND THE CONSTRUCTION WORK AREA
I)RESERVE OR BACKUP PUMP(S) SHALL BE KEPT ON SITE AT ALL TIMES.

WATER BARRIER INSTALLATION

BETWEEN THE PUMP HOSE INTAKE OR SUMP HOLE AREA AND THE TRENCH, AS WELL AS DOWNSTREAM OF THE TRENCH, DAMS OF RELATIVELY IMPERVIOUS MATERIAL SHALL BE INSTALLED. THE UPSTREAM DAM SHALL BE COMPLETED FIRST. EVERY REASONABLE EFFORT SHALL BE MADE TO CONSTRUCT THE DAMS AS WATER TIGHT AS POSSIBLE.

THE FOLLOWING BMPS WILL BE IMPLEMENTED DURING WATER BARRIER INSTALLATION:
A)DAMS SHALL BE CONSTRUCTED OF EITHER SANDBAGS, WATER BLADDERS, STEEL PLATES, PORTA-DAMS OR EQUIVALENT OR "JERSEY BARRIERS"AND PLASTIC SHEETING OR A COMBINATION THEREOF
B)THE DAMS SHALL BE CONSTRUCTED OF SUFFICIENT HEIGHT TO ALLOW ADEQUATE FREEBOARD UNDER REASONABLY EXPECTED WATER LEVELS OR FLOWS AND PROVIDE FOR SOME IMPOUNDMENT OF WATER
C)PRIOR TO COMPLETION OF THE DAMS, THE PUMP(S) MUST BE STARTED IN ORDER TO PROVIDE DOWNSTREAM FLOW OF WATER AROUND THE CONSTRUCTION WORK AREA
D)THE RATE OF PUMPING SHALL BE MONITORED TO MINIMIZE DRAINING OF THE INTAKE SUMP AND THE RESULTING CESSATION IN FLOW. ALTERNATIVELY, PUMPING SHALL BE MONITORED AND INCREASED AS NECESSARY TO PREVENT OVERTOPPING OF THE DAMS.

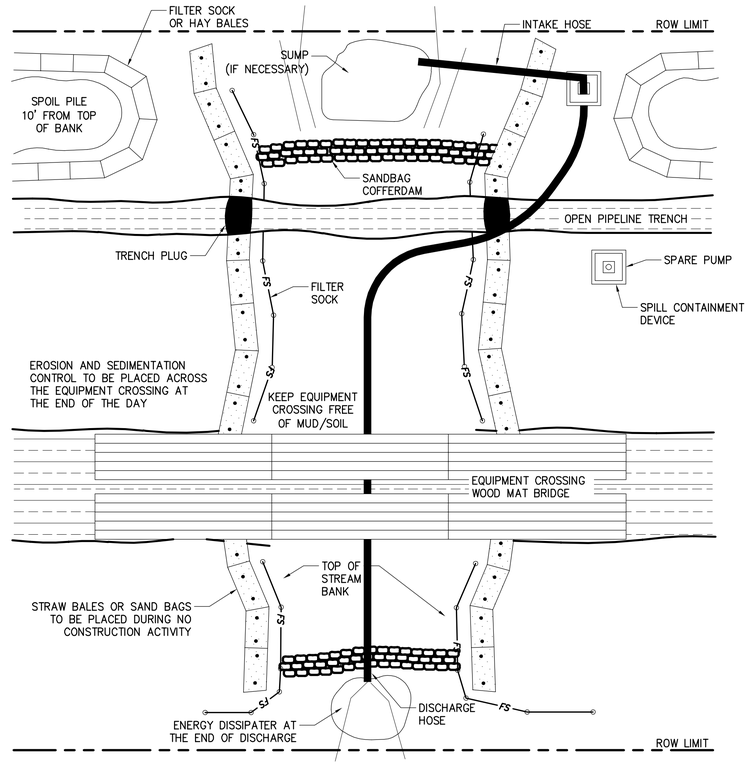

1 DAM AND PUMP AROUND STREAM CROSSING
SCALE: N.T.S.

GENERAL SEQUENCE:
1. SCHEDULE CONSTRUCTION DURING LOW FLOW PERIOD, IF POSSIBLE.
2. SET UP PUMP AND HOSE AS SHOWN, OR USE PRACTICAL ALTERNATIVES. PUMP SHOULD HAVE TWICE THE PUMPING CAPACITY OR ANTICIPATED FLOW. HAVE STANDBY PUMP ON SITE. DEPENDING ON STREAM FLOW,DIG SUMP HOLE TO CONCENTRATE WATER AT INTAKE.
3. INSTALL UPSTREAM DAM COMPOSED OF SANDBAGS, METAL PLATING OR A COMBINATION OF BOTH. INSTALL DOWNSTREAM DAM, IF REQUIRED, TO KEEP STREAM BED DRY.
4. AFTER DAMS ARE IN PLACE, IT MAY BE NECESSARY TO USE ADDITIONAL PUMPS TO HANDLE STREAM FLOW.
5. EXCAVATE TRENCH AND LOWER IN PIPE UNDER HOSE. MOVE HOSE AS REQUIRED OR DISCONNECT, IF TEMPORARY FLOW BLOCKAGE IS ACCEPTABLE. BACKFILL TRENCH.
6. DISMANTLE DOWNSTREAM DAM, THEN UPSTREAM DAM. KEEP PUMP RUNNING TO MAINTAIN STREAM FLOW.
7. RESTORE STREAM BANKS AND APPROACHES FOR A MINIMUM DISTANCE OF AT LEAST 50 FEET FROM THE STREAM EDGES AND PERMANTENTLY STABLIZE WITHIN 1 DAY OF INITIAL RESTORATION.

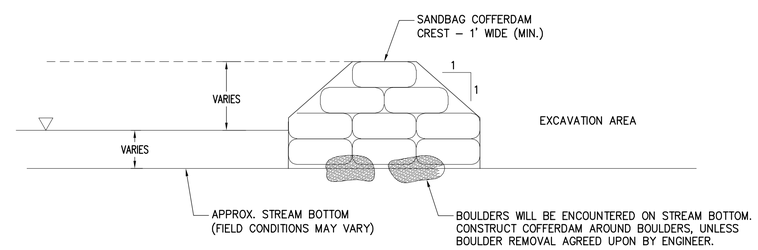

2 SANDBAG COFFERDAM DETAIL
SCALE: N.T.S.

NOTES:
1. SAND BAGS SHALL BE FILTER FABRIC TYPE AND BE DOUBLE BAGGED.
2. PORTADAM, BY PORTADAM, INC. SHALL BE CONSTRUCTED ACCEPTABLE SUBSTITUTE TO SAND BAGS

CHPE Champlain Hudson Power Express

Kiewit

CHA
III Winners Circle, PO Box 5269
Albany, NY 12205-0269
518.453.4500 . www.chacompanies.com

No.	DATE	SUBMITTAL / REVISION DESCRIPTION	DB	APP
0	04/05/2023	FINAL EM&CP SUBMISSION	JJE	JPR

CHAMPLAIN HUDSON POWER EXPRESS
SEGMENTS 4 & 5 (PACKAGE 3) - CP: FORT EDWARD TO MILTON
EROSION AND SEDIMENT CONTROL DETAILS

DRAWN BY: JTM | DESIGNED BY: JTM | APPROVED BY: JPR | SCALE AS NOTED | REV. NO.

KIEWIT PROJECT NO. 21162
CHA PROJECT NO. 066076
DRAWING NO. C-603
DATE 04/05/2023
SH.NO.

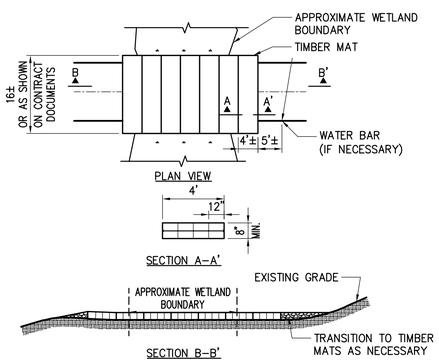

NOTES:
1. TIMBER MATS SHOULD BE INSTALLED IN WETLANDS AND OTHER AREAS IF NECESSARY TO PREVENT RUTTING.
2. BASED ON ACTUAL SITE CONDITIONS, MULTIPLE LAYERS OF TIMBER MATS MAY BE REQUIRED.
3. TIMBER MAT SURFACE SHOULD BE LEVEL TO PREVENT EQUIPMENT AND VEHICLES FROM SLIDING OFF DURING MUDDY OR ICING CONDITIONS, AND PREVENT TIMBERS FROM BREAKING.
4. SEDIMENT TRACKED ONTO TIMBER MATTING SHOULD BE REMOVED AS NECESSARY TO PREVENT SEDIMENT FROM ENTERING WETLAND DURING RAIN EVENTS. SEDIMENT SHOULD BE REMOVED TO A STABILIZED SOIL STOCKPILE OR OTHER APPROVED LOCATION.
5. PERIMETER EROSION AND SEDIMENT CONTROLS ARE REQUIRED TO BE INSTALLED PRIOR TO PLACING TIMBER MATTING.
6. UNLESS PERMITTED FROM REMOVAL, STUMPS WITHIN THE WETLAND SHOULD REMAIN. THIS MAY REQUIRE ADDITIONAL TIMBERS TO BRIDGE ABOVE.
7. UPON REMOVAL OF TIMBER MATTING ALL SPLINTERED WOOD SHOULD BE REMOVED. IF EXPOSED SOILS ARE PRESENT STRAW MULCH SHOULD BE APPLIED.

OPTION "A"
NOT TO SCALE

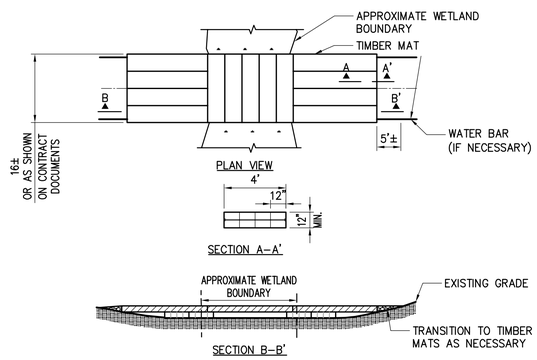

NOTES:
1. TIMBER MATS SHOULD BE INSTALLED IN WETLANDS AND OTHER AREAS IF NECESSARY TO PREVENT RUTTING.
2. BASED ON ACTUAL SITE CONDITIONS, MULTIPLE LAYERS OF TIMBER MATS MAY BE REQUIRED.
3. TIMBER MAT SURFACE SHOULD BE LEVEL TO PREVENT EQUIPMENT AND VEHICLES FROM SLIDING OFF DURING MUDDY OR ICING CONDITIONS, AND PREVENT TIMBERS FROM BREAKING.
4. SEDIMENT TRACKED ONTO TIMBER MATTING SHOULD BE REMOVED AS NECESSARY TO PREVENT SEDIMENT FROM ENTERING WETLAND DURING RAIN EVENTS. SEDIMENT SHOULD BE REMOVED TO A STABILIZED SOIL STOCKPILE OR OTHER APPROVED LOCATION.
5. PERIMETER EROSION AND SEDIMENT CONTROLS ARE REQUIRED TO BE INSTALLED PRIOR TO PLACING TIMBER MATTING.
6. UNLESS PERMITTED FROM REMOVAL, STUMPS WITHIN THE WETLAND SHOULD REMAIN. THIS MAY REQUIRE ADDITIONAL TIMBERS TO BRIDGE ABOVE.
7. UPON REMOVAL OF TIMBER MATTING ALL SPLINTERED WOOD SHOULD BE REMOVED. IF EXPOSED SOILS ARE PRESENT STRAW MULCH SHOULD BE APPLIED.

OPTION "B"
NOT TO SCALE

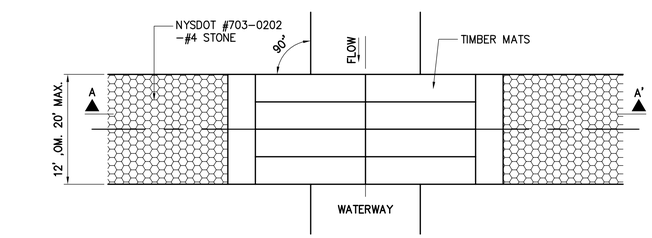

PLAN

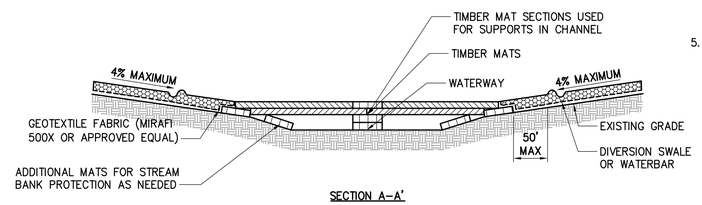

SECTION A–A'

NOTES:
1. IN–STREAM EXCAVATION SHOULD BE COMPLETED IN ACCORDANCE WITH "TEMPORARY ACCESS WATERWAY CROSSING" ON PAGE 2.32 OF THE 2016 NYSDEC STANDARDS AND SPECIFICATIONS FOR EROSION AND SEDIMENT CONTROL (OR NEWEST VERSION) AND THE CERTIFICATE.
2. THE CONSTRUCTION OF ANY CROSSING SHOULD NOT CAUSE A SIGNIFICANT WATER LEVEL DIFFERENCE BETWEEN THE UPSTREAM AND DOWNSTREAM WATER SURFACE ELEVATIONS. IN–STREAM WORK WILL BE PROHIBITED WITHIN COLD WATER TROUT FISHERIES FROM OCTOBER 1 TO MAY 31.
3. ALL FILL MATERIALS ASSOCIATED WITH THE ROADWAY APPROACH SHOULD BE LIMITED TO A MAXIMUM HEIGHT OF 2 FEET ABOVE THE EXISTING FLOOD PLAIN ELEVATION.
4. A WATER DIVERTING STRUCTURE SUCH AS A SWALE OR WATER BAR SHOULD BE CONSTRUCTED (ACROSS THE ROADWAY ON BOTH ROADWAY APPROACHES) 50 FEET (MAXIMUM) ON EITHER SIDE OF THE WATERWAY CROSSING. THIS WILL PREVENT ROADWAY SURFACE RUNOFF FROM DIRECTLY ENTERING THE WATERWAY. THE 50 FEET MEASURED IS MEASURED FROM THE TOP OF THE WATERWAY BANK. IF THE ROADWAY APPROACH IS CONSTRUCTED WITH A REVERSE GRADE AWAY FROM THE WATERWAY, A SEPARATE DIVERTING STRUCTURE IS NOT REQUIRED.
5. ALL CROSSINGS SHOULD HAVE ONE TRAFFIC LANE. THE MINIMUM WIDTH SHOULD BE 12 FEET WITH A MAXIMUM WIDTH OF 20 FEET.

OPTION "C"
NOT TO SCALE

1 TIMBER MATTING
SCALE: N.T.S.

CHPE Champlain Hudson Power Express

Kiewit

CHA
III Winners Circle, PO Box 5269
Albany, NY 12205-0269
518.453.4500 . www.chacompanies.com

No.	DATE	SUBMITTAL / REVISION DESCRIPTION	DB	APP
0	04/05/2023	FINAL EM&CP SUBMISSION	JJE	JPR

CHAMPLAIN HUDSON POWER EXPRESS
SEGMENTS 4 & 5 (PACKAGE 3) - CP: FORT EDWARD TO MILTON
WETLAND CROSSING DETAILS

DRAWN BY: JJE | DESIGNED BY: JTM | APPROVED BY: JPR | SCALE AS NOTED | REV. NO. X | DATE 04/05/2023 | SH.NO.

KIEWIT PROJECT NO. 21162
CHA PROJECT NO. 066076
DRAWING NO. C-611

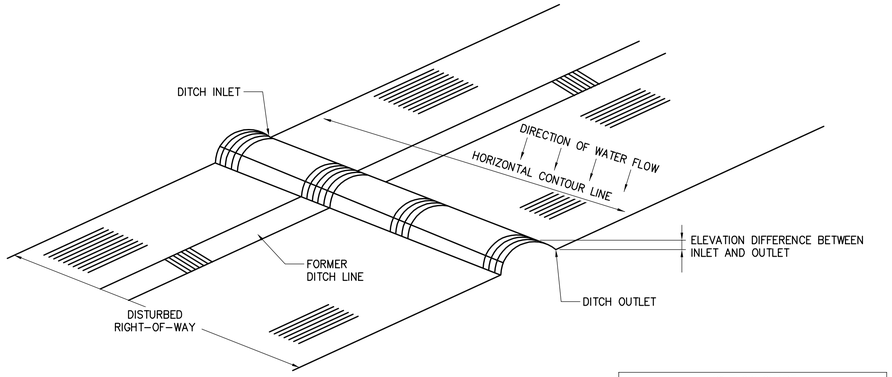

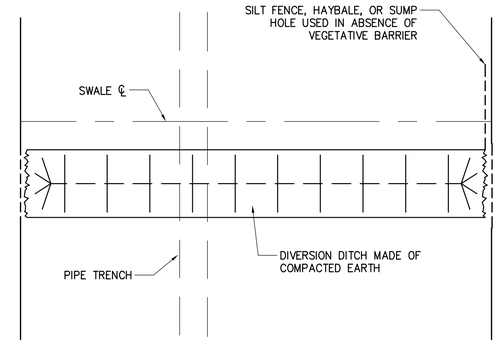

OVERHEAD VIEW

WATER SHALL BE DIVERTED OFF THE DISTURBED RIGHT-OF-WAY AT AN OUTSLOPE OF THREE TO FIVE PERCENT BY CONSTRUCTING DIVERSION DITCH ACCORDING TO THE FOLLOWING PROCEDURES:

1. AT THE PROPOSED INTERCEPTOR DITCH LOCATION ESTABLISH A HORIZONTAL CONTOUR LINE (USING A POCKET TRANSIT OR HAND LEVEL) WHICH EXTENDS COMPLETELY ACROSS THE DISTURBED RIGHT-OF-WAY. THIS LINE WILL ALWAYS BE PERPENDICULAR TO THE DIRECTION OF WATER FLOW AND SHOULD BE PARALLEL TO THE MAP CONTOURS SHOWN ON THE PLAN DRAWINGS.
2. DETERMINE WHICH SIDE OF THE RIGHT-OF-WAY IS BEST SUITED FOR THE DITCH OUTLET (EVALUATE VEGETATION DENSITY, LOCAL TOPOGRAPHY, ETC.) AND DEVIATE DIKE AWAY FROM THE HORIZONTAL CONTOUR LINE SLIGHTLY DOWNWARD TOWARD THE SELECTED OUTLET SIDE MAINTAINING A THREE TO FIVE PERCENT SLOPE. AS AN EXAMPLE, THE CHART AT THE RIGHT SHOWS DIMENSIONS ASSUMING A FOUR PERCENT SLOPE.
3. WHEN OUTLETTING NEAR WATER BODIES, STREAMS, DITCHES, & CROP FIELDS, A FILTER FENCE OR STRAW BALE FENCE SHOULD BE PLACED ON OUTLET END OF THE DIVERSION DITCH.

4% FLOW CHART	
HORIZONTAL DISTANCE BETWEEN WATERBAR INLET & OUTLET (FEET)	ELEVATION DISTANCE BETWEEN WATERBAR INLET AND OUTLET (FEET)
75	3
100	4
125	5
150	6
175	7

TEMPORARY DRAINAGE DITCH

NOTES:

1. TEMPORARY DIVERSION DITCH SHOULD BE BUILT SIMILAR TO THE PERMANENT DITCH CONFIGURATION BUT THE DIMENSION CAN BE SCALED BACK.
2. MAXIMUM HEIGHT SHOULD BE 12" AND SHOULD BE COMPACTED.
3. SPACING BETWEEN DIVERSION DITCHES AND SKEW OF THE DIVERSION DITCHES CAN VARY FROM THE PERMANENT DIVERSION DITCHES.
4. WHEN CONSTRUCTING TEMPORARY DIVERSION DITCHES THEY SHOULD BE FUNCTIONAL, WHILE MAINLINE CONSTRUCTION IS PROCEEDING, UNTIL RESTORATION BEGINS AND PERMANENT DIVERSION DITCHES ARE THEN CONSTRUCTED.

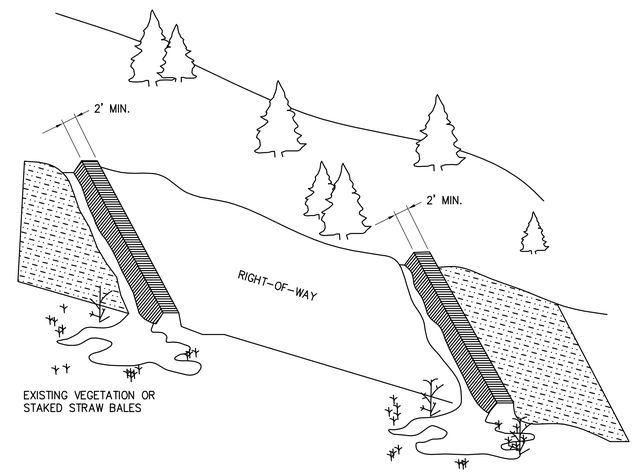

1 PERMANENT DIVERSION DITCH DETAIL

SCALE: N.T.S.

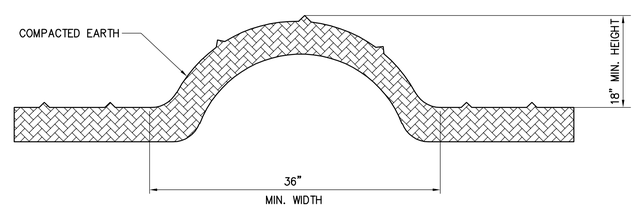

2 MINIMAL HEIGHT & WIDTH DIMENSIONS FOR WATERBAR CONSTRUCTION

SCALE: N.T.S.

CHPE Champlain Hudson Power Express

Kiewit

CHA
III Winners Circle, PO Box 5269
Albany, NY 12205-0269
518.453.4500 . www.chacompanies.com

No.	DATE	SUBMITTAL / REVISION DESCRIPTION	DB	APP
0	04/05/2023	FINAL EM&CP SUBMISSION	JJE	JPR

CHAMPLAIN HUDSON POWER EXPRESS
SEGMENTS 4 & 5 (PACKAGE 3) - CP: FORT EDWARD TO MILTON
WATERBAR DETAILS

DRAWN BY: JTM | DESIGNED BY: JTM | APPROVED BY: JPR | SCALE AS NOTED | REV. NO.

KIEWIT PROJECT NO. 21162
CHA PROJECT NO. 066076
DRAWING NO. C-612
DATE 04/05/2023
SH.NO.

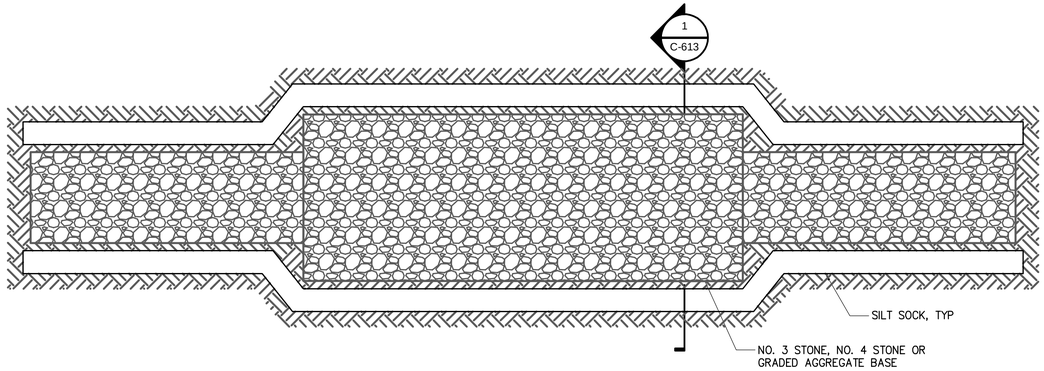

WETLAND WORKING SURFACE PLAN – OPTION A

NOT TO SCALE

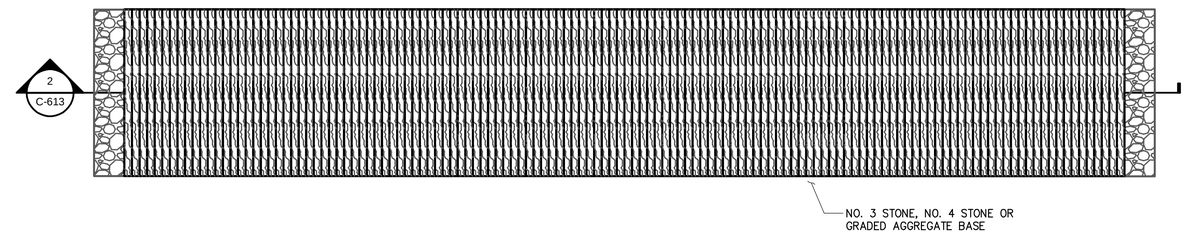

WETLAND WORKING SURFACE PLAN – OPTION B

NOT TO SCALE

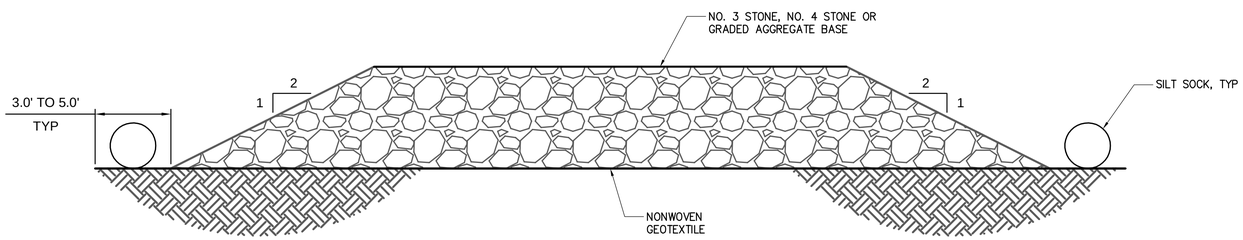

1 SECTION

NOT TO SCALE

NOTES:

1. *UNDERCUT AND REMOVE TOP SOIL PRIOR TO PLACING GEOTEXTILE FABRIC.*
2. *A LAYER OF CLEAN CRUSHED STONE SHALL BE LAID ON TOP OF THE GEOTEXTILE FABRIC.*
3. *GEOTEXTILE FABRIC SHALL EXTEND AT LEAST 3 FT TO 5 FT BEYOND THE EDGE OF STONE PLACEMENT TO MINIMIZE STONE ENTERING THE WETLAND AND FACILITATE REMOVAL OF THE ROAD.*
4. *SUITABLE CROSS DRAINING SHALL BE PROVIDED ACROSS THE ROAD FOR STREAM CHANNELS AND SURFACE FLOW.*
5. *AREA TO BE RESTORED IN ACCORDANCE WITH THE EM&CP SECTION 14*

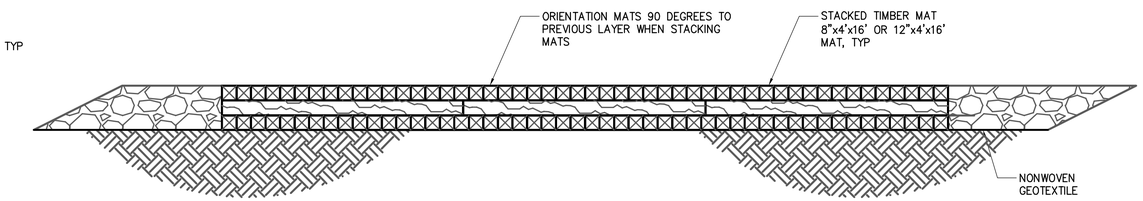

2 SECTION

NOT TO SCALE

NOTES:

1. *TIMBER MATS SHOULD BE INSTALLED IN WETLANDS AND OTHER AREAS IF NECESSARY TO PREVENT RUTTING.*
2. *BASED ON ACTUAL SITE CONDITIONS, NUMBER OF TIMBER MAT LAYERS TO BE DETERMINED ON SITE.*
3. *TIMBER MAT SURFACE SHOULD BE LEVEL TO PREVENT EQUIPMENT AND VEHICLES FROM SLIDING OFF DURING MUDDY OR ICING CONDITIONS, AND PREVENT TIMBERS FROM BREAKING.*
4. *SEDIMENT TRACKED ONTO TIMBER MATTING SHOULD BE REMOVED AS NECESSARY TO PREVENT SEDIMENT FROM ENTERING WETLAND DURING RAIN EVENTS. SEDIMENT SHOULD BE REMOVED TO A STABILIZED SOIL STOCKPILE OR OTHER APPROVED LOCATION.*
5. *PERIMETER EROSION AND SEDIMENT CONTROLS ARE REQUIRED TO BE INSTALLED PRIOR TO PLACING TIMBER MATTING.*
6. *UNLESS PERMITTED FROM REMOVAL, STUMPS WITHIN THE WETLAND SHOULD REMAIN. THIS MAY REQUIRE ADDITIONAL TIMBERS TO BRIDGE ABOVE.*
7. *UPON REMOVAL OF TIMBER MATTING ALL SPLINTERED WOOD SHOULD BE REMOVED. IF EXPOSED SOILS ARE PRESENT STRAW MULCH SHOULD BE APPLIED.*
8. *IF DEEMED NECESSARY BY CONSTRUCTION IN THE FIELD, GEOTEXTILE FABRIC TO BE INSTALLED UNDER MATTING. (TYP)*
9. *AREA TO BE RESTORED IN ACCORDANCE WITH THE EM&CP SECTION 14.*

GENERAL NOTES:

1. *TIMBER:*
   A. *TIMBER SHALL BE SELECT STRUCTURAL MIXED OAK WITH A MINIMUM BENDING STRESS OF 1250 PSI OR BETTER.*
2. *CONTRACTOR TO VERIFY ALL DIMENSIONS AND SITE CONDITIONS PRIOR TO COMMENCING WORK. ANY ERRORS, OMISSIONS, OR UNUSUAL CONDITIONS ARE TO BE REPORTED TO THE TEMPORARY STRUCTURES AND CONSTRUCTION DEVICES ENGINEER IMMEDIATELY.*

CHPE Champlain Hudson Power Express

Kiewit

CHA
III Winners Circle, PO Box 5269
Albany, NY 12205-0269
518.453.4500 . www.chacompanies.com

No.	DATE	SUBMITTAL / REVISION DESCRIPTION	DB	APP
0	04/05/2023	FINAL EM&CP SUBMISSION	JJE	JPR

CHAMPLAIN HUDSON POWER EXPRESS
SEGMENTS 4 & 5 (PACKAGE 3) - CP: FORT EDWARD TO MILTON
WETLAND WORKING SURFACES PLAN

DRAWN BY: JTM | DESIGNED BY: JTM | APPROVED BY: JPR | SCALE AS NOTED | REV. NO. X

KIEWIT PROJECT NO. 21162
CHA PROJECT NO. 066076
DRAWING NO. C-613
DATE 04/05/2023
SH.NO.

Appendix F
SWPPP Inspection Forms

PERMIT NUMBER: NYR-

PRE-CONSTRUCTION MEETING DOCUMENTS

Project Name _____

GP-0-20-001 Permit No. _____ **Date of Authorization** _____

Name of Owner/Operator _____

General Contractor _____

The Following Information To Be Read By All Person's Involved in The Construction of Stormwater Related Activities:

Site Assessment and Inspections -

a. The Owner or Operator agrees to have a Qualified Inspector[1] conduct an assessment of the site prior to the commencement of construction. The Qualified Inspector shall certify in this inspection report that the appropriate erosion and sediment controls described in the SWPPP have been adequately installed or implemented to ensure overall preparedness of the site for the commencement of construction.

b. For construction sites where soil disturbance activities have been temporarily suspended (e.g. winter shutdown) and temporary stabilization measures have been applied to all disturbed areas, the owner or operator can stop conducting inspections. The owner or operator shall resume inspections as soon as soil disturbance activities are reinitiated.

c. For construction sites where soil disturbance activities have been shut down with partial project completion, the owner or operator can stop conducting inspections if all areas disturbed (as of the project shutdown date) have achieved final stabilization and all post-construction stormwater management practices, required for the completed portion of the project, have been constructed in conformance with the SWPPP and are operational.

d. Following the commencement of construction, site inspections shall be conducted by the Qualified Inspector to ensure that erosion and sediment controls are being maintained in effective operating condition at all times. Inspections shall occur at least: (i) once every 7 calendar days for construction sites where soil disturbance activities are occurring; (ii) twice every 7 calendar days for construction sites where soil disturbance activities are occurring and the Owner/Operator has received authorization to disturb greater than five (5) acres of soil at any one time; (iii) once every thirty (30) calendar days for construction sites where soil disturbance activities have been temporarily suspended and temporary stabilization measures have been applied to all disturbed areas; and (iv) for construction sites where soil disturbance activities have been shut down with partial project completion, the Qualified Inspector can stop conducting inspections if all areas disturbed as of the project shutdown date have achieved final stabilization, and all post-construction stormwater management practices for the completed portion of the project have been constructed in conformance with the SWPPP and are operational.

e. The owner or operator shall notify the Regional Office stormwater contact person in writing prior to reducing the frequency of any inspections.

f. The Owner/Operator shall maintain a record of all inspection reports in the site log book. The site log book shall be maintained on site and be made available to the permitting authorities upon request. Prior to the commencement of construction,[2] the Owner/Operator shall certify in the site log book that the SWPPP is prepared in accordance with the State's standards and meets all Federal, State and local erosion and sediment control requirements.

g. Prior to filing of the Notice of Termination or the end of permit term, the Owner/Operator shall have the Qualified Inspector perform a final site inspection. The Qualified Inspector shall certify that the site has undergone final stabilization[3] using either vegetative or structural stabilization methods and that all temporary erosion and sediment controls (such as silt fencing) not needed for long-term erosion control have been removed.

[1]"Qualified Inspector" means a person knowledgeable in the principles and practice of erosion and sediment controls, such as a Certified Professional in Erosion and Sediment Control (CPESC), soil scientist, licensed Professional Engineer (PE), licensed Landscape Architect, or other Department endorsed individual(s). It may also mean someone working under the direct supervision of, and at the same company as, the licensed Professional Engineer, Certified Professional in Erosion and Sediment Control (CPESC), or soil scientist provided that person has training in the principles and practices of erosion and sediment control. Training means that person has received four (4) hours of training endorsed by the Department and shall receive four (4) hours of training every three (3) years after the initial training session.
[2]"Commencement of construction" means the initial removal of vegetation and disturbance of soils associated with clearing, grading or excavating activities or other construction activities.
[3]"Final stabilization" means that all soil disturbance activities at the site have been completed and a uniform, perennial vegetative cover with a density of eighty (80) percent over the entire pervious surface has been established, or equivalent stabilization measures (such as the use of mulches or geotextiles, rock rip-rap or washed/crushed stone) have been employed on all disturbed areas that are not covered by permanent structures, concrete or pavement.

PRE-CONSTRUCTION SITE ASSESSMENT FORM

Inspector Name and Title	**Date and Time of Inspection**
Qualified Inspector	**Qualified Inspector Signature**

The above signed acknowledges that, to the best of his/her knowledge, all information provided on the following forms is accurate and complete.

a. Notice of Intent, SWPPP, and Contractors' Certification:

Yes	No	NA	
☐	☐	☐	Has a Notice of Intent been filed with the NYS Department of Conservation?
☐	☐	☐	Is the SWPPP on-site? Where? _____
☐	☐	☐	Is the Plan current? What is the latest revision date? _____
☐	☐	☐	Have all contractors involved with implementing the erosion and sediment control portions of the SWPPP signed the contractor's certification?

b. Resource Protection

Yes	No	NA	
☐	☐	☐	Are construction limits clearly flagged or fenced?
☐	☐	☐	Important trees and associated rooting zones, on-site septic system absorption fields, existing vegetated areas suitable for filter strips, especially in perimeter areas, etc. have been flagged for protection.
☐	☐	☐	Creek crossings installed prior to land-disturbing activity, including clearing and blasting.

c. Surface Water Protection

Yes	No	NA	
☐	☐	☐	Clean stormwater runoff has been diverted away from areas to be disturbed.
☐	☐	☐	Bodies of water located either on site or in the vicinity of the site have been identified and protected.
☐	☐	☐	Appropriate practices to protect on-site or downstream surface waters are installed.

d. Stabilized Construction Entrance

Yes	No	NA	
☐	☐	☐	A temporary construction entrance to capture mud and debris from construction vehicles before they enter the public highway has been installed.
☐	☐	☐	Other access areas (entrances, construction routes, equipment parking areas) are stabilized immediately as work takes place with gravel or other cover.
☐	☐	☐	Sediment tracked onto public streets is removed or cleaned on a regular basis.

e. Perimeter Sediment Controls

Yes	No	NA	
☐	☐	☐	Silt fence material and installation comply with the standard drawing and specifications.
☐	☐	☐	Silt fences are installed at appropriate spacing intervals
☐	☐	☐	Sediment/detention basin was installed
☐	☐	☐	Sediment traps and barriers are installed.

PERMIT NUMBER: INSPECTION REPORT #__ :

Location	**Date and Time of Inspection**
Qualified Inspector (name and title)	**Qualified Inspector Signature**

The above signed acknowledges that, to the best of his/her knowledge, all information provided on the following forms is accurate and complete.

☐ **Weekly Inspection**

Current Phase of Construction (if applicable):

Estimated Current Total Disturbed Area:

IMMEDIATE ACTION ITEMS / INSPECTION SUMMARY:

It is the responsibility of the Qualified Inspector to notify the owner/operator and appropriate contractor of any corrective actions that need to be taken within one (1) business day of the completion of an inspection. It is the responsibility of the contractor (subcontractor) to begin implementing the corrective actions within one (1) business day of this notification and complete the corrective action within a reasonable time frame. If there are action items from the previous inspection which have not been addressed, so note.

Per the GP-0-20-001, Digital photographs with date stamp, that clearly show the condition of all practices that have been identified as needing corrective actions shall be included with each inspection report. The qualified inspector shall attach paper color copies of the digital photographs to the inspection report being maintained onsite within seven (7) calendar days of the date of the inspection. The qualified inspector shall also take digital photographs, with date stamp, that clearly show the condition of the practice(s) after the corrective action has been completed. Paper color copies of these digital photographs shall be attached to the inspection report, documenting the completion of the corrective action work within seven (7) calendar days of that inspection.

1. GENERAL HOUSEKEEPING

Includes description of the weather and soil conditions (e.g. dry, wet, saturated) during the time of the inspection, a description of the condition of the runoff at all points of discharge from the construction site (including identification of any discharges of sediments from construction site), inspection for stream/pond turbidity, oil and floating substances, visible oil film, or globules or grease, contractor preparedness for implementation of erosion and sediment control, impact on adjacent property, and dust control.

Yes	No	
☐	☐	Is there immediate action required regarding General Housekeeping?

Notes:

2. EXCAVATION DEWATERING

Includes inspection ensuring that clean water from upstream pool is being pumped to the downstream pool, that sediment laden water from work area is being discharged to a silt-trapping device, and that constructed upstream berm has one-foot minimum freeboard.

Yes	No	
☐	☐	Is there immediate action required regarding Excavation Dewatering?

Notes:

3. INTERCEPTOR DIKES AND SWALES

Includes inspection ensuring that dikes and swales are installed per plan with minimum side slopes 2H:1V or flatter, are stabilized by geotextile fabric, seed, or mulch with no erosion occurring, and that sediment-laden runoff is directed to sediment trapping structure.

Yes	No	
☐	☐	Is there immediate action required regarding an Interceptor Dike or Swale?

Notes:

4. EROSION & SEDIMENT CONTROL

Includes inspection ensuring that erosion and sediment control practices are located and installed correctly, BMPs are maintained per specifications, stockpiles are stabilized and contained, de-watering operations prevent direct discharges to sensitive features, and that clearing and grading operations are divided into stages for large areas. Identification of all erosion and sediment control practices that need repair or maintenance.

Yes	No	
☐	☐	Is there immediate action required regarding Erosion & Sediment Control?

Notes:

5. AREAS OF DISTURBANCE

Includes description and sketch of areas that are disturbed at the time of the inspection and areas that have been stabilized (temporary and/or final) since last inspection.

Yes	No	
☐	☐	Is there immediate action required regarding stabilizing disturbed areas?

Notes:

6. STABILIZED CONSTRUCTION ENTRANCE

Includes inspection ensuring that stone is clean enough to effectively remove mud from vehicles, is installed per standards and specifications, that all traffic use the stabilized entrance to enter and leave site, and that adequate drainage is provided to prevent ponding at entrance.

Yes	No	
☐	☐	Is there immediate action required regarding a Stabilized Construction Entrance?

Notes:

7. REINFORCED SILT FENCE

Includes inspection ensuring that silt fence is installed on contour, 10 feet from toe of slope, joints are constructed by wrapping the two ends together for continuous support, steel posts installed (if applicable), installed on downstream side of slope, maximum 6' intervals with 6 x 6 inch 14 gage wire, fabric is buried minimum of 6 inches, posts are stable, fabric is tight and without rips or frayed areas, and that sediment accumulation is less than 1/3 the height of the silt fence.

Yes	No	
☐	☐	Is there immediate action required regarding Silt Fence?

Notes:

8. STONE CHECK DAM

Includes inspection ensuring that stone check dam channels are without erosion (i.e., flow is not eroding soil underneath or around the structure), that check dam is in good condition (i.e., rocks have not been displaced and no permanent pools behind the structure), and that sediment accumulation is less than design capacity.

Yes	No	
☐	☐	Is there immediate action required regarding a Stone Check Dam?

Notes:

9. COMPOST FILTER SOCK

Includes inspection ensuring that compost filter sock is anchored in earth with 2"x2" wooden stakes driven 12" into the soil on 10 foot centers on the centerline of the sock. On uneven terrain, effective ground contact can be enhanced by the placement of a fillet of filter media on the disturbed area side of the compost sock. Damaged filter socks shall be replaced or repaired according the manufacturer's recommendations.

Yes	No	
☐	☐	Is there immediate action required regarding Compost Filter Sock?

Notes:

10. FILTER FABRIC (DROP) INLET PROTECTION

Includes inspection ensuring that protection is installed with 2-inch x 4-inch wood frame and wood posts, with maximum 3-foot spacing, is buried a minimum of 8 inches and secured to frame/posts with staples at max 8-inch spacing, has posts with 3-foot maximum spacing between posts, has posts that are stable, fabric is tight and without rips or frayed areas, and that sediment accumulation is within design capacity.

Yes	No	
☐	☐	Is there immediate action required regarding Filter Fabric (Drop) Inlet Protection?

Notes:

11. SILTSACK® INLET PROTECTION

Includes inspection ensuring that protection is installed per manufacturers specifications and is maintained per manufacturers recommendations.

Yes	No	
☐	☐	Is there immediate action required regarding the Inlet Protection?

Notes:

12.TEMPORARY SEDIMENT TRAP

Includes inspection ensuring that outlet structure is constructed per the approved plan or drawing, that geotextile fabric has been placed beneath rock fill, and that sediment accumulation is within design capacity.

Yes	No	
☐	☐	Is there immediate action required regarding Temporary Sediment Traps?

Notes:

13. CONCRETE WASHOUT

Includes inspection ensuring that the concrete washout is constructed and maintained per the approved plan or drawing.

Yes	No	
☐	☐	Is there immediate action required regarding Concrete Washouts?

Notes:

14. STORMWATER BASIN

Includes inspection ensuring that Permanent Stormwater Basins are installed per plans and specifications.

Yes	No	
☐	☐	Is there immediate action required regarding Stormwater Basins?

Notes:

15. CURRENT PHASE OF POST-CONSTRUCTION STORMWATER PRACTICES

Includes inspection of current phase of all post-construction stormwater management practices, identification of all construction that is not in conformance with the SWPPP and technical standards, identify corrective action(s) that must be taken to install, repair, replace or maintain erosion and sediment control practices, and to correct deficiencies identified with the construction of post-construction stormwater management practice(s).

Yes	No	
☐	☐	Is there immediate action required regarding the current phase of post-construction stormwater management practices?

Notes:

ADDITIONAL NOTES / MODIFICATIONS

Appendix G
SWPPP Amendments

Appendix H
Notice of Intent (NOI)
SPDES GP-0-20-001

NOI for coverage under Stormwater General Permit for Construction Activity

version 1.35

(Submission #: HPH-QGG1-8AGEQ, version 1)

Details

Originally Started By	Julia Chan
Alternate Identifier	Champlain Hudson Power Express Segments 4 and 5 - Package 3
Submission ID	HPH-QGG1-8AGEQ
Submission Reason	New
Status	Draft
Active Steps	Form Submitted

Form Input

Owner/Operator Information

Owner/Operator Name (Company/Private Owner/Municipality/Agency/Institution, etc.)
Transmission Developers Inc.

Owner/Operator Contact Person Last Name (NOT CONSULTANT)
NONE PROVIDED

Owner/Operator Contact Person First Name
NONE PROVIDED

Owner/Operator Mailing Address
1301 Avenue of the Americas, 26th Floor

City
New York City

State
New York

Zip
10019

Phone
NONE PROVIDED

Email
NONE PROVIDED

Federal Tax ID
NONE PROVIDED

Project Location

Project/Site Name
Champlain Hudson Power Express Segments 4 and 5 - Package 3

Street Address (Not P.O. Box)
CP Rail

Side of Street
East

City/Town/Village (THAT ISSUES BUILDING PERMIT)
Kingsbury to Ballston Spa

State
NY

Zip
12831

DEC Region
5

County
WASHINGTON
SARATOGA

Name of Nearest Cross Street
NONE PROVIDED

Distance to Nearest Cross Street (Feet)
NONE PROVIDED

Project In Relation to Cross Street
NONE PROVIDED

Tax Map Numbers Section-Block-Parcel
NONE PROVIDED

Tax Map Numbers
NONE PROVIDED

1. Coordinates

Provide the Geographic Coordinates for the project site. The two methods are:
- Navigate to the project location on the map (below) and click to place a marker and obtain the XY coordinates.
- The "Find Me" button will provide the lat/long for the person filling out this form. Then pan the map to the correct location and click the map to place a marker and obtain the XY coordinates.

Navigate to your location and click on the map to get the X,Y coordinates
43.11918180020924,-73.73926819575102

Project Details

2. What is the nature of this project?
Redevelopment with no increase in impervious area

3. Select the predominant land use for both pre and post development conditions.

Pre-Development Existing Landuse
Linear Utility

Post-Development Future Land Use
Linear Utility (wqter/sewer/gas, etc.)

3a. If Single Family Subdivision was selected in question 3, enter the number of subdivision lots.
NONE PROVIDED

---

4. In accordance with the larger common plan of development or sale, enter the total project site acreage, the acreage to be disturbed and the future impervious area (acreage)within the disturbed area.

*** ROUND TO THE NEAREST TENTH OF AN ACRE. ***

Total Site Area (acres)
31.93

Total Area to be Disturbed (acres)
31.93

Existing Impervious Area to be Disturbed (acres)
25.55

Future Impervious Area Within Disturbed Area (acres)
25.55

5. Do you plan to disturb more than 5 acres of soil at any one time?
No

---

6. Indicate the percentage (%) of each Hydrologic Soil Group(HSG) at the site.

A (%)
53

B (%)
2

C (%)
2

D (%)
43

7. Is this a phased project?
Yes

8. Enter the planned start and end dates of the disturbance activities.

Start Date
NONE PROVIDED

End Date
NONE PROVIDED

9. Identify the nearest surface waterbody(ies) to which construction site runoff will discharge.
Wetlands, Champlain Canal tribs, Snook Kill, Delegan Brook, SpringRun, Putnam Bk, Hudson River tribs

9a. Type of waterbody identified in question 9?
Stream/Creek On Site
Stream/Creek Off Site
Wetland/State Jurisdiction Off Site
Wetland/State Jurisdiction On Site (Answer 9b)
Wetland/Federal Jurisdiction On Site (Answer 9b)
Wetland/Federal Jurisdiction Off Site

Other Waterbody Type Off Site Description
NONE PROVIDED

9b. If "wetland" was selected in 9A, how was the wetland identified?
Delineated by Consultant

10. Has the surface waterbody(ies in question 9 been identified as a 303(d) segment in Appendix E of GP-0-20-001?
Yes

11. Is this project located in one of the Watersheds identified in Appendix C of GP-0-20-001?
No

12. Is the project located in one of the watershed areas associated with AA and AA-S classified waters?
No

If No, skip question 13.

13. Does this construction activity disturb land with no existing impervious cover and where the Soil Slope Phase is identified as D (provided the map unit name is inclusive of slopes greater than 25%), E or F on the USDA Soil Survey?
No

If Yes, what is the acreage to be disturbed?
NONE PROVIDED

14. Will the project disturb soils within a State regulated wetland or the protected 100 foot adjacent area?
Yes

15. Does the site runoff enter a separate storm sewer system (including roadside drains, swales, ditches, culverts, etc)?
Yes

16. What is the name of the municipality/entity that owns the separate storm sewer system?
Kingsbury, For Edwards, Moreau, Wilton, Saratoga, Milton, and Ballston Spa

17. Does any runoff from the site enter a sewer classified as a Combined Sewer?
No

18. Will future use of this site be an agricultural property as defined by the NYS Agriculture and Markets Law?
No

19. Is this property owned by a state authority, state agency, federal government or local government?
Yes

20. Is this a remediation project being done under a Department approved work plan? (i.e. CERCLA, RCRA, Voluntary Cleanup Agreement, etc.)
No

Required SWPPP Components

21. Has the required Erosion and Sediment Control component of the SWPPP been developed in conformance with the current NYS Standards and Specifications for Erosion and Sediment Control (aka Blue Book)?
Yes

22. Does this construction activity require the development of a SWPPP that includes the post-construction stormwater management practice component (i.e. Runoff Reduction, Water Quality and Quantity Control practices/techniques)?
No

If you answered No in question 22, skip question 23 and the Post-construction Criteria and Post-construction SMP Identification sections.

23. Has the post-construction stormwater management practice component of the SWPPP been developed in conformance with the current NYS Stormwater Management Design Manual?
NONE PROVIDED

24. The Stormwater Pollution Prevention Plan (SWPPP) was prepared by:
Professional Engineer (P.E.)

SWPPP Preparer
CHA Consulting, Inc.

Contact Name (Last, Space, First)
Romano, Joseph P.

Mailing Address
3 Winners Circle

City
Albany

State
NY

Zip
12205

Phone
518-453-4750

Email
jromano@chacompanies.com

Download SWPPP Preparer Certification Form
Please take the following steps to prepare and upload your preparer certification form:

1) Click on the link below to download a blank certification form
2) The certified SWPPP preparer should sign this form
3) Scan the signed form
4) Upload the scanned document
Download SWPPP Preparer Certification Form

Please upload the SWPPP Preparer Certification
NONE PROVIDED
Comment
NONE PROVIDED

Erosion & Sediment Control Criteria

25. Has a construction sequence schedule for the planned management practices been prepared?
Yes

26. Select all of the erosion and sediment control practices that will be employed on the project site:

Temporary Structural
Check Dams
Construction Road Stabilization
Dust Control
Silt Fence
Stabilized Construction Entrance
Storm Drain Inlet Protection

Biotechnical
None

Vegetative Measures
Seeding
Topsoiling
Mulching

Permanent Structural
None

Other
Compost Filter Sock and Wetland Protection Fence

Post-Construction Criteria

*** IMPORTANT: Completion of Questions 27-39 is not required if response to Question 22 is No.**

27. Identify all site planning practices that were used to prepare the final site plan/layout for the project.
NONE PROVIDED

27a. Indicate which of the following soil restoration criteria was used to address the requirements in Section 5.1.6("Soil Restoration") of the Design Manual (2010 version).
NONE PROVIDED

28. Provide the total Water Quality Volume (WQv) required for this project (based on final site plan/layout). (Acre-feet)
NONE PROVIDED

29. Post-construction SMP Identification
Use the Post-construction SMP Identification section to identify the RR techniques (Area Reduction), RR techniques(Volume Reduction) and Standard SMPs with RRv Capacity that were used to reduce the Total WQv Required (#28).

Identify the SMPs to be used by providing the total impervious area that contributes runoff to each technique/practice selected. For the Area Reduction Techniques, provide the total contributing area (includes pervious area) and, if applicable, the total impervious area that contributes runoff to the technique/practice.

Note: Redevelopment projects shall use the Post-Construction SMP Identification section to identify the SMPs used to treat and/or reduce the WQv required. If runoff reduction techniques will not be used to reduce the required WQv, skip to question 33a after identifying the SMPs.

30. Indicate the Total RRv provided by the RR techniques (Area/Volume Reduction) and Standard SMPs with RRv capacity identified in question 29. (acre-feet)
NONE PROVIDED

31. Is the Total RRv provided (#30) greater than or equal to the total WQv required (#28)?
NONE PROVIDED

If Yes, go to question 36. If No, go to question 32.

32. Provide the Minimum RRv required based on HSG. [Minimum RRv Required = (P) (0.95) (Ai) / 12, Ai=(s) (Aic)] (acre-feet)
NONE PROVIDED

32a. Is the Total RRv provided (#30) greater than or equal to the Minimum RRv Required (#32)?
NONE PROVIDED

If Yes, go to question 33.
Note: Use the space provided in question #39 to summarize the specific site limitations and justification for not reducing 100% of WQv required (#28). A detailed evaluation of the specific site limitations and justification for not reducing 100% of the WQv required (#28) must also be included in the SWPPP.

If No, sizing criteria has not been met; therefore, NOI can not be processed. SWPPP preparer must modify design to meet sizing criteria.

33. SMPs
Use the Post-construction SMP Identification section to identify the Standard SMPs and, if applicable, the Alternative SMPs to be used to treat the remaining total WQv (=Total WQv Required in #28 - Total RRv Provided in #30).

Also, provide the total impervious area that contributes runoff to each practice selected.

NOTE: Use the Post-construction SMP Identification section to identify the SMPs used on Redevelopment projects.

33a. Indicate the Total WQv provided (i.e. WQv treated) by the SMPs identified in question #33 and Standard SMPs with RRv Capacity identified in question #29. (acre-feet)
NONE PROVIDED

Note: For the standard SMPs with RRv capacity, the WQv provided by each practice = the WQv calculated using the contributing drainage area to the practice - provided by the practice. (See Table 3.5 in Design Manual)

34. Provide the sum of the Total RRv provided (#30) and the WQv provided (#33a).
NONE PROVIDED

35. Is the sum of the RRv provided (#30) and the WQv provided (#33a) greater than or equal to the total WQv required (#28)?
NONE PROVIDED

If Yes, go to question 36.

If No, sizing criteria has not been met; therefore, NOI can not be processed. SWPPP preparer must modify design to meet sizing criteria.

36. Provide the total Channel Protection Storage Volume (CPv required and provided or select waiver (#36a), if applicable.

CPv Required (acre-feet)
NONE PROVIDED

CPv Provided (acre-feet)
NONE PROVIDED

36a. The need to provide channel protection has been waived because:
NONE PROVIDED

37. Provide the Overbank Flood (Qp) and Extreme Flood (Qf) control criteria or select waiver (#37a), if applicable.

Overbank Flood Control Criteria (Qp)

Pre-Development (CFS)
NONE PROVIDED

Post-Development (CFS)
NONE PROVIDED

Total Extreme Flood Control Criteria (Qf)

Pre-Development (CFS)
NONE PROVIDED

Post-Development (CFS)
NONE PROVIDED

37a. The need to meet the Qp and Qf criteria has been waived because:
NONE PROVIDED

38. Has a long term Operation and Maintenance Plan for the post-construction stormwater management practice(s) been developed?
NONE PROVIDED

If Yes, Identify the entity responsible for the long term Operation and Maintenance
NONE PROVIDED

39. Use this space to summarize the specific site limitations and justification for not reducing 100% of WQv required (#28). (See question #32a) This space can also be used for other pertinent project information.
NONE PROVIDED

Post-Construction SMP Identification

Runoff Reduction (RR) Techniques, Standard Stormwater Management Practices (SMPs) and Alternative SMPs
Identify the Post-construction SMPs to be used by providing the total impervious area that contributes runoff to each technique/practice selected. For the Area Reduction Techniques, provide the total contributing area (includes pervious area) and, if applicable, the total impervious area that contributes runoff to the technique/practice.

RR Techniques (Area Reduction)

Round to the nearest tenth

Total Contributing Acres for Conservation of Natural Area (RR-1)
NONE PROVIDED

Total Contributing Impervious Acres for Conservation of Natural Area (RR-1)
NONE PROVIDED

Total Contributing Acres for Sheetflow to Riparian Buffers/Filter Strips (RR-2)
NONE PROVIDED

Total Contributing Impervious Acres for Sheetflow to Riparian Buffers/Filter Strips (RR-2)
NONE PROVIDED

Total Contributing Acres for Tree Planting/Tree Pit (RR-3)
NONE PROVIDED

Total Contributing Impervious Acres for Tree Planting/Tree Pit (RR-3)
NONE PROVIDED

Total Contributing Acres for Disconnection of Rooftop Runoff (RR-4)
NONE PROVIDED

RR Techniques (Volume Reduction)

Total Contributing Impervious Acres for Disconnection of Rooftop Runoff (RR-4)
NONE PROVIDED

Total Contributing Impervious Acres for Vegetated Swale (RR-5)
NONE PROVIDED

Total Contributing Impervious Acres for Rain Garden (RR-6)
NONE PROVIDED

Total Contributing Impervious Acres for Stormwater Planter (RR-7)
NONE PROVIDED

Total Contributing Impervious Acres for Rain Barrel/Cistern (RR-8)
NONE PROVIDED

Total Contributing Impervious Acres for Porous Pavement (RR-9)
NONE PROVIDED

Total Contributing Impervious Acres for Green Roof (RR-10)
NONE PROVIDED

Standard SMPs with RRv Capacity

Total Contributing Impervious Acres for Infiltration Trench (I-1)
NONE PROVIDED

Total Contributing Impervious Acres for Infiltration Basin (I-2)
NONE PROVIDED

Total Contributing Impervious Acres for Dry Well (I-3)
NONE PROVIDED

Total Contributing Impervious Acres for Underground Infiltration System (I-4)
NONE PROVIDED

Total Contributing Impervious Acres for Bioretention (F-5)
NONE PROVIDED

Total Contributing Impervious Acres for Dry Swale (O-1)
NONE PROVIDED

Standard SMPs

Total Contributing Impervious Acres for Micropool Extended Detention (P-1)
NONE PROVIDED

Total Contributing Impervious Acres for Wet Pond (P-2)
NONE PROVIDED

Total Contributing Impervious Acres for Wet Extended Detention (P-3)
NONE PROVIDED

Total Contributing Impervious Acres for Multiple Pond System (P-4)
NONE PROVIDED

Total Contributing Impervious Acres for Pocket Pond (P-5)
NONE PROVIDED

Total Contributing Impervious Acres for Surface Sand Filter (F-1)
NONE PROVIDED

Total Contributing Impervious Acres for Underground Sand Filter (F-2)
NONE PROVIDED

Total Contributing Impervious Acres for Perimeter Sand Filter (F-3)
NONE PROVIDED

Total Contributing Impervious Acres for Organic Filter (F-4)
NONE PROVIDED

Total Contributing Impervious Acres for Shallow Wetland (W-1)
NONE PROVIDED

Total Contributing Impervious Acres for Extended Detention Wetland (W-2)
NONE PROVIDED

Total Contributing Impervious Acres for Pond/Wetland System (W-3)
NONE PROVIDED

Total Contributing Impervious Acres for Pocket Wetland (W-4)
NONE PROVIDED

Total Contributing Impervious Acres for Wet Swale (O-2)
NONE PROVIDED

Alternative SMPs (DO NOT INCLUDE PRACTICES BEING USED FOR PRETREATMENT ONLY)

Total Contributing Impervious Area for Hydrodynamic
NONE PROVIDED

Total Contributing Impervious Area for Wet Vault
NONE PROVIDED

Total Contributing Impervious Area for Media Filter
NONE PROVIDED

"Other" Alternative SMP?
NONE PROVIDED

Total Contributing Impervious Area for "Other"
NONE PROVIDED

Provide the name and manufaturer of the alternative SMPs (i.e. proprietary practice(s)) being used for WQv treatment.

Note: Redevelopment projects which do not use RR techniques, shall use questions 28, 29, 33 and 33a to provide SMPs used, total WQv required and total WQv provided for the project.

Manufacturer of Alternative SMP
NONE PROVIDED

Name of Alternative SMP
NONE PROVIDED

Other Permits

40. Identify other DEC permits, existing and new, that are required for this project/facility.
Water Quality Certificate

If SPDES Multi-Sector GP, then give permit ID
NONE PROVIDED

If Other, then identify
NONE PROVIDED

41. Does this project require a US Army Corps of Engineers Wetland Permit?
Yes

If "Yes," then indicate Size of Impact, in acres, to the nearest tenth
NONE PROVIDED

42. If this NOI is being submitted for the purpose of continuing or transferring coverage under a general permit for stormwater runoff from construction activities, please indicate the former SPDES number assigned.
NONE PROVIDED

MS4 SWPPP Acceptance

43. Is this project subject to the requirements of a regulated, traditional land use control MS4?
Yes - Please attach the MS4 Acceptance form below

If No, skip question 44

44. Has the "MS4 SWPPP Acceptance" form been signed by the principal executive officer or ranking elected official and submitted along with this NOI?
Yes

MS4 SWPPP Acceptance Form Download
Download form from the link below. Complete, sign, and upload.
MS4 SWPPP Acceptance Form

MS4 Acceptance Form Upload
NONE PROVIDED
Comment
NONE PROVIDED

Owner/Operator Certification

Owner/Operator Certification Form Download
Download the certification form by clicking the link below. Complete, sign, scan, and upload the form.

Owner/Operator Certification Form (PDF, 45KB)

Upload Owner/Operator Certification Form

NONE PROVIDED

Comment

NONE PROVIDED

Status History

	User	Processing Status
5/16/2022 5:35:34 PM	Julia Chan	Draft

Processing Steps

Step Name	Assigned To/Completed By	Date Completed
Form Submitted		
Under Review	DAVID GASPER	
Under Review	Daniel von Schilgen	

SWPPP Preparer Certification Form

SPDES General Permit for Stormwater Discharges From Construction Activity (GP-0-20-001)

Project Site Information

Project/Site Name

Champlain Hudson Power Express Segments 4 and 5 - Package 3

Owner/Operator Information

Owner/Operator (Company Name/Private Owner/Municipality Name)

Transmission Developers Inc.

Certification Statement – SWPPP Preparer

I hereby certify that the Stormwater Pollution Prevention Plan (SWPPP) for this project has been prepared in accordance with the terms and conditions of the GP-0-20-001. Furthermore, I understand that certifying false, incorrect or inaccurate information is a violation of this permit and the laws of the State of New York and could subject me to criminal, civil and/or administrative proceedings.

Joseph	P.	Romano
First name	MI	Last Name

Signature

Date

NEW YORK STATE OF OPPORTUNITY | Department of Environmental Conservation

Owner/Operator Certification Form

SPDES General Permit For Stormwater Discharges From Construction Activity (GP-0-20-001)

Project/Site Name: Champlain Hudson Power Express Segments 4 and 5 - Package 3

eNOI Submission Number: HPH-QGG1-8AGEQ

eNOI Submitted by: ☐ **Owner/Operator** ☑ **SWPPP Preparer** ☐ **Other**

Certification Statement - Owner/Operator

I have read or been advised of the permit conditions and believe that I understand them. I also understand that, under the terms of the permit, there may be reporting requirements. I hereby certify that this document and the corresponding documents were prepared under my direction or supervision. I am aware that there are significant penalties for submitting false information, including the possibility of fine and imprisonment for knowing violations. I further understand that coverage under the general permit will be identified in the acknowledgment that I will receive as a result of submitting this NOI and can be as long as sixty (60) business days as provided for in the general permit. I also understand that, by submitting this NOI, I am acknowledging that the SWPPP has been developed and will be implemented as the first element of construction, and agreeing to comply with all the terms and conditions of the general permit for which this NOI is being submitted.

Owner/Operator First Name M.I. Last Name

Signature

Date

NYS Department of Environmental Conservation
Division of Water
625 Broadway, 4th Floor
Albany, New York 12233-3505

MS4 Stormwater Pollution Prevention Plan (SWPPP) Acceptance Form

for

Construction Activities Seeking Authorization Under SPDES General Permit

*(NOTE: Attach Completed Form to Notice Of Intent and Submit to Address Above)

I. Project Owner/Operator Information	
1. Owner/Operator Name:	Transmission Developers Inc.
2. Contact Person:	
3. Street Address:	1301 Avenue of the Americas, 26th Floor
4. City/State/Zip:	New York City, NY 10019
II. Project Site Information	
5. Project/Site Name:	Champlain Hudson Power Express Segments 4 & 5 - Package 3
6. Street Address:	CP Rail
7. City/State/Zip:	Town of Kingsbury
III. Stormwater Pollution Prevention Plan (SWPPP) Review and Acceptance Information	
8. SWPPP Reviewed by:	
9. Title/Position:	
10. Date Final SWPPP Reviewed and Accepted:	
IV. Regulated MS4 Information	
11. Name of MS4:	
12. MS4 SPDES Permit Identification Number: NYR20A	
13. Contact Person:	
14. Street Address:	
15. City/State/Zip:	
16. Telephone Number:	

MS4 SWPPP Acceptance Form - continued

V. Certification Statement - MS4 Official (principal executive officer or ranking elected official) or Duly Authorized Representative

I hereby certify that the final Stormwater Pollution Prevention Plan (SWPPP) for the construction project identified in question 5 has been reviewed and meets the substantive requirements in the SPDES General Permit For Stormwater Discharges from Municipal Separate Storm Sewer Systems (MS4s). Note: The MS4, through the acceptance of the SWPPP, assumes no responsibility for the accuracy and adequacy of the design included in the SWPPP. In addition, review and acceptance of the SWPPP by the MS4 does not relieve the owner/operator or their SWPPP preparer of responsibility or liability for errors or omissions in the plan.

Printed Name:

Title/Position:

Signature:

Date:

VI. Additional Information

(NYS DEC - MS4 SWPPP Acceptance Form - January 2015)

NYS Department of Environmental Conservation
Division of Water
625 Broadway, 4th Floor
Albany, New York 12233-3505

MS4 Stormwater Pollution Prevention Plan (SWPPP) Acceptance Form

for

Construction Activities Seeking Authorization Under SPDES General Permit

*(NOTE: Attach Completed Form to Notice Of Intent and Submit to Address Above)

I. Project Owner/Operator Information	
1. Owner/Operator Name:	Transmission Developers Inc.
2. Contact Person:	
3. Street Address:	1301 Avenue of the Americas, 26th Floor
4. City/State/Zip:	New York City, NY 10019
II. Project Site Information	
5. Project/Site Name:	Champlain Hudson Power Express Segment 4 & 5 - Package 3
6. Street Address:	CP Rail
7. City/State/Zip:	Town of Fort Edward /NY/12828
III. Stormwater Pollution Prevention Plan (SWPPP) Review and Acceptance Information	
8. SWPPP Reviewed by:	
9. Title/Position:	
10. Date Final SWPPP Reviewed and Accepted:	
IV. Regulated MS4 Information	
11. Name of MS4:	
12. MS4 SPDES Permit Identification Number: NYR20A	
13. Contact Person:	
14. Street Address:	
15. City/State/Zip:	
16. Telephone Number:	

MS4 SWPPP Acceptance Form - continued

V. Certification Statement - MS4 Official (principal executive officer or ranking elected official) or Duly Authorized Representative

I hereby certify that the final Stormwater Pollution Prevention Plan (SWPPP) for the construction project identified in question 5 has been reviewed and meets the substantive requirements in the SPDES General Permit For Stormwater Discharges from Municipal Separate Storm Sewer Systems (MS4s). Note: The MS4, through the acceptance of the SWPPP, assumes no responsibility for the accuracy and adequacy of the design included in the SWPPP. In addition, review and acceptance of the SWPPP by the MS4 does not relieve the owner/operator or their SWPPP preparer of responsibility or liability for errors or omissions in the plan.

Printed Name:

Title/Position:

Signature:

Date:

VI. Additional Information

(NYS DEC - MS4 SWPPP Acceptance Form - January 2015)

NYS Department of Environmental Conservation
Division of Water
625 Broadway, 4th Floor
Albany, New York 12233-3505

MS4 Stormwater Pollution Prevention Plan (SWPPP) Acceptance Form

for

Construction Activities Seeking Authorization Under SPDES General Permit

*(NOTE: Attach Completed Form to Notice Of Intent and Submit to Address Above)

I. Project Owner/Operator Information	
1. Owner/Operator Name:	Transmission Developers Inc.
2. Contact Person:	
3. Street Address:	1301 Avenue of the Americas, 26th Floor
4. City/State/Zip:	New York City, NY 10019
II. Project Site Information	
5. Project/Site Name:	Champlain Hudson Power Express Segment 4 & 5 - Package 3
6. Street Address:	CP Rail
7. City/State/Zip:	Village of Fort Edward/NY/12828
III. Stormwater Pollution Prevention Plan (SWPPP) Review and Acceptance Information	
8. SWPPP Reviewed by:	
9. Title/Position:	
10. Date Final SWPPP Reviewed and Accepted:	
IV. Regulated MS4 Information	
11. Name of MS4:	
12. MS4 SPDES Permit Identification Number: NYR20A	
13. Contact Person:	
14. Street Address:	
15. City/State/Zip:	
16. Telephone Number:	

MS4 SWPPP Acceptance Form - continued

V. Certification Statement - MS4 Official (principal executive officer or ranking elected official) or Duly Authorized Representative

I hereby certify that the final Stormwater Pollution Prevention Plan (SWPPP) for the construction project identified in question 5 has been reviewed and meets the substantive requirements in the SPDES General Permit For Stormwater Discharges from Municipal Separate Storm Sewer Systems (MS4s). Note: The MS4, through the acceptance of the SWPPP, assumes no responsibility for the accuracy and adequacy of the design included in the SWPPP. In addition, review and acceptance of the SWPPP by the MS4 does not relieve the owner/operator or their SWPPP preparer of responsibility or liability for errors or omissions in the plan.

Printed Name:

Title/Position:

Signature:

Date:

VI. Additional Information

(NYS DEC - MS4 SWPPP Acceptance Form - January 2015)

NYS Department of Environmental Conservation
Division of Water
625 Broadway, 4th Floor
Albany, New York 12233-3505

MS4 Stormwater Pollution Prevention Plan (SWPPP) Acceptance Form

for

Construction Activities Seeking Authorization Under SPDES General Permit

*(NOTE: Attach Completed Form to Notice Of Intent and Submit to Address Above)

I. Project Owner/Operator Information	
1. Owner/Operator Name:	Transmission Developers Inc.
2. Contact Person:	
3. Street Address:	1301 Avenue of the Americas, 26th Floor
4. City/State/Zip:	New York City, NY 10019
II. Project Site Information	
5. Project/Site Name:	Champlain Hudson Power Express Segment 4 & 5 - Package 3
6. Street Address:	CP Rail
7. City/State/Zip:	Moreau/NY/12803
III. Stormwater Pollution Prevention Plan (SWPPP) Review and Acceptance Information	
8. SWPPP Reviewed by:	
9. Title/Position:	
10. Date Final SWPPP Reviewed and Accepted:	
IV. Regulated MS4 Information	
11. Name of MS4:	
12. MS4 SPDES Permit Identification Number: NYR20A	
13. Contact Person:	
14. Street Address:	
15. City/State/Zip:	
16. Telephone Number:	