CHAMPLAIN HUDSON POWER EXPRESS

SEGMENT 3 (PACKAGE 1C) - WHITEHALL TO FORT ANN

WASHINGTON COUNTY, NEW YORK

CI OWNER SUBMISSION

(JULY 8, 2022)

NOTES TO CO-LOCATED INFRASTRUCTURE REVIEWERS:

Please review the attached information regarding the CHPE alignment relating to your infrastructure and provide your concurrence of the Project's cables separation and alignment and any feedback to ben.cole@wsp.com. It is important to TDI that the construction and operation of the CHPE does not interfere with the continued operation of your infrastructure.

See applicable locations depicting crossing(s) and/or parallel interactions with assets owned by your organization. Specific details applicable to each crossing are currently being developed and will depend on depth of existing co-located infrastructure and other site conditions identified in the field. However, Utility Typical Separation Details are presented on Drawing No. C-901 for your review and discussion initiation.

The basis of design for this package as it relates to the proposed Horizontal and Vertical underground separations from all Co-Located Infrastructure is 5' (H) and 2' (V). These separation distances are to be maintained as a minimum at all times and any variances (i.e. closer) will be presented to your organization prior to implementation and called out specifically on the plans.

Note that there may be some gaps in the pages provided, this is intentional as some of the pages do not present assets owned by your organization. In addition, please see attached the Champlain Hudson Power Express "Upland Co-Located Utility Summation Matrix" for the location (by Station) of assets that may interact with the proposed project.

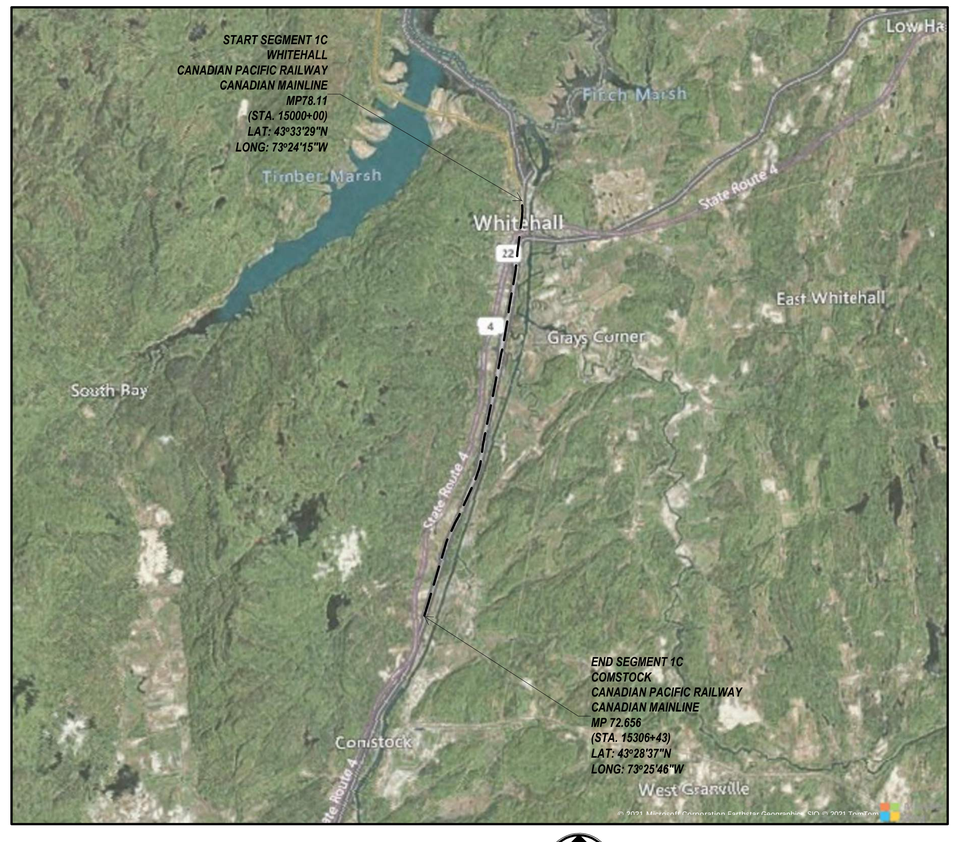

SITE LOCATION MAP
SCALE: 1" = 5000'

NOT FOR CONSTRUCTION

CHPE Champlain Hudson Power Express

Kiewit

CHA
III Winners Circle, PO Box 5269
Albany, NY 12205-0269
518.453.4500 . www.chacompanies.com

IT IS A VIOLATION OF LAW FOR ANY PERSON, UNLESS THEY ARE ACTING UNDER THE DIRECTION OF A LICENSED PROFESSIONAL ENGINEER, ARCHITECT, LANDSCAPE ARCHITECT OR LAND SURVEYOR TO ALTER AN ITEM IN ANY WAY. IF AN ITEM BEARING THE STAMP OF A LICENSED PROFESSIONAL IS ALTERED, THE ALTERING ENGINEER, ARCHITECT, LANDSCAPE ARCHITECT OR LAND SURVEYOR SHALL STAMP THE DOCUMENT AND INCLUDE THE NOTATION "ALTERED BY" FOLLOWED BY THEIR SIGNATURE, THE DATE OF SUCH ALTERATION, AND A SPECIFIC DESCRIPTION OF THE ALTERATION.

No.	DATE	SUBMITTAL / REVISION DESCRIPTION	DB	APP
A	07/08/2021	EM&CP REGULATORY SUBMISSION	JM	JR

CHAMPLAIN HUDSON POWER EXPRESS
SEGMENT 3 (PACKAGE 1C) WHITEHALL TO FORT ANN
COVER SHEET

KIEWIT PROJECT NO. 21162
CHA PROJECT NO. 066076
DRAWING NO. G-000

DRAWN BY: JTM | DESIGNED BY: JTM | APPROVED BY: JPR | SCALE AS NOTED | REV. NO. X | DATE 07/08/2022 | SH.NO. XXX OF XXX

File: V:\PROJECTS\ANY\K6\066076.000\09_DESIGN\DRAWINGS\01_SHEETS\DESIGN PACKAGE 1\DESIGN PACKAGE 1C\066076_P1C - G-000 COVER SHEET.DWG Saved: 7/7/2022 8:44:40 AM Plotted: 7/7/2022 3:35:46 PM Current User: Evans, Josh LastSavedBy: 7899

SHEET LIST TABLE	
SHEET NUMBER	SHEET TITLE
PACKAGE 6: GENERAL SHEETS	
G-000	COVER SHEET
G-001	SHEET INDEX
G-002	GENERAL NOTES
G-003	LEGEND
G-004	KEY PLAN
PACKAGE 6: PLAN AND PROFILE SHEETS	
C-103, C-104, C-115-C-121	STA: 15000+00 TO 15306+43 PLAN AND PROFILE
PACKAGE 6: HDD TRENCHLESS SHEETS	
C-304-C-307	PROPOSED PLAN AND PROFILE HDD5-HDD8
PACKAGE 6: DETAILS	
C-621	TRENCHING DETAILS
C-901	UTILITY TYPICAL SEPARATION DETAILS

CHPE Champlain Hudson Power Express

Kiewit

CHA
III Winners Circle, PO Box 5269
Albany, NY 12205-0269
518.453.4500 . www.chacompanies.com

IT IS A VIOLATION OF LAW FOR ANY PERSON, UNLESS THEY ARE ACTING UNDER THE DIRECTION OF A LICENSED PROFESSIONAL ENGINEER, ARCHITECT, LANDSCAPE ARCHITECT OR LAND SURVEYOR TO ALTER AN ITEM IN ANY WAY. IF AN ITEM BEARING THE STAMP OF A LICENSED PROFESSIONAL IS ALTERED, THE ALTERING ENGINEER, ARCHITECT, LANDSCAPE ARCHITECT OR LAND SURVEYOR SHALL STAMP THE DOCUMENT AND INCLUDE THE NOTATION "ALTERED BY" FOLLOWED BY THEIR SIGNATURE, THE DATE OF SUCH ALTERATION, AND A SPECIFIC DESCRIPTION OF THE ALTERATION.

No.	DATE	SUBMITTAL / REVISION DESCRIPTION	DB	APP
A	07/08/2021	EM&CP REGULATORY SUBMISSION	JM	JR

CHAMPLAIN HUDSON POWER EXPRESS
SEGMENT 3 (PACKAGE 1C) WHITEHALL TO FORT ANN
SHEET INDEX

DRAWN BY: XXX DESIGNED BY: XXX APPROVED BY: XXX

SCALE AS NOTED
REV. NO. X

KIEWIT PROJECT NO. 21162
CHA PROJECT NO. 066076
DRAWING NO. G-001
DATE 07/08/2022
SH.NO. XXX OF XXX

File: V:\PROJECTS\ANY\K6\066076.000\09_DESIGN\DRAWINGS\01_SHEETS\DESIGN PACKAGE 1\DESIGN PACKAGE 1C\066076_1C_G-001.DWG Saved: 7/7/2022 2:41:41 PM Plotted: 7/7/2022 3:35:52 PM Current User: Evans, Josh LastSavedBy: 4894

GENERAL NOTES:

1. THE PLANS SHOW SUBSURFACE STRUCTURES, ABOVE GROUND STRUCTURES AND/OR UTILITIES FROM FIELD LOCATION AND RECORD MAPPING, EXACT LOCATION OF WHICH MAY VARY FROM THE LOCATIONS INDICATED. IN PARTICULAR, THE CONTRACTOR IS WARNED THAT THE EXACT OR EVEN APPROXIMATE LOCATION OF SUCH PIPELINES, SUBSURFACE STRUCTURES AND/OR UTILITIES IN THE AREA MAY BE DIFFERENT FROM THAT SHOWN OR MAY NOT BE SHOWN, AND IT SHALL BE HIS RESPONSIBILITY TO PROCEED WITH GREAT CARE IN EXECUTING ANY WORK. 48 HOURS BEFORE YOU DIG, DRILL, OR BLAST, CALL U.F.P.O. 1-(800)-962-7962 TOLL FREE.

2. THE ENGINEER SHALL BE NOTIFIED IN WRITING OF ANY CONDITIONS THAT VARY FROM THOSE SHOWN ON THE PLANS. THE CONTRACTOR'S WORK SHALL NOT VARY FROM THE PLANS WITHOUT THE EXPRESSED APPROVAL OF THE ENGINEER. CHANGES TO THE PLAN SHALL BE DONE IN ACCORDANCE WITH THE EM&CP SECTION 3.2.6.

3. THE CONTRACTOR SHALL RESTORE LAWNS, DRIVEWAYS, CULVERTS, SIGNS AND OTHER PUBLIC OR PRIVATE PROPERTY DAMAGED OR REMOVED TO AT LEAST AS GOOD A CONDITION AS BEFORE BEING DISTURBED AS DETERMINED BY THE ENGINEER.

4. THE CONTRACTOR AND/OR CERTIFICATE HOLDER SHALL BE RESPONSIBLE FOR OBTAINING AND INCURRING THE COST OF ALL CONSTRUCTION PERMITS, INSPECTIONS, CERTIFICATES, ETC. AND SHALL COMPLY WITH ALL REQUIRED PERMITS.

5. ALL WORK SHALL BE DONE IN STRICT COMPLIANCE WITH ALL APPLICABLE NATIONAL, STATE, AND LOCAL CODES, STANDARDS, ORDINANCES, RULES, AND REGULATIONS.

6. ALL PROPOSED UTILITIES AND APPURTENANCES TO BE CONSTRUCTED IN COMPLIANCE WITH THE LOCAL MUNICIPALITIES' CODES AND REGULATIONS GOVERNING THE INSTALLATION OF SUCH UTILITIES.

7. THE ENGINEER RESERVES THE RIGHT TO EXAMINE ANY WORK DONE ON THIS PROJECT AT ANY TIME TO DETERMINE THE CONFORMANCE WITH THE REQUIREMENTS OF THE CONTRACT DOCUMENTS OF THIS PROJECT.

8. THE CONTRACTOR SHALL PROTECT EXISTING PROPERTY LINE MONUMENTATION. ANY MONUMENTATION DISTURBED OR DESTROYED, AS JUDGED BY THE ENGINEER OR OWNER, SHALL BE REPLACED AT THE CONTRACTOR'S EXPENSE UNDER THE SUPERVISION OF A NEW YORK STATE LICENSED LAND SURVEYOR.

9. IT IS THE CONTRACTOR'S RESPONSIBILITY TO EXAMINE ALL PLAN SHEETS.

10. THE CONTRACTOR SHALL:

    A. VERIFY ALL CONDITIONS IN THE FIELD PRIOR TO COMMENCEMENT OF WORK AND NOTIFY THE ENGINEER OF ANY DISCREPANCIES.
    B. EXAMINE THE SITE AND INCLUDE IN HIS WORK THE EFFECT OF ALL EXISTING CONDITIONS ON THE WORK.
    C. PROVIDE AND INSTALL ALL MATERIALS AND PERFORM ALL WORK IN ACCORDANCE WITH RECOGNIZED GOOD STANDARD PRACTICE.

11. ALL TRENCH EXCAVATION AND ANY REQUIRED SHEETING AND SHORING SHALL BE DONE IN ACCORDANCE WITH THE LATEST REVISIONS OF NEW YORK STATE INDUSTRIAL CODE RULE 23 AND OSHA REGULATIONS FOR CONSTRUCTION. SHEET PILING SHALL BE DESIGNED AND SEALED BY A NEW YORK STATE PROFESSIONAL ENGINEER. WHERE WITHIN RAIL ROAD ROW, ANY EXCAVATION AND SHORING SHALL BE DESIGNED TO MINIMUM CP AND AREMA REQUIREMENTS.

12. CONTRACTOR SHALL BE RESPONSIBLE FOR DEWATERING AND THE MAINTENANCE OF SURFACE DRAINAGE DURING THE COURSE OF WORK IN CONFORMANCE WITH REFERENCE SECTION 4.4.6 DEWATERING METHODS IN THE EM&CP. CONTRACTOR SHALL MAINTAIN EXISTING SITE DRAINAGE PATTERNS THROUGHOUT CONSTRUCTION UNLESS OTHERWISE SHOWN ON THE PLANS.

13. MAINTAIN FLOW FOR ALL EXISTING UTILITIES.

14. ALL FRAMES/COVERS WITHIN PAVED AREAS SHALL HAVE THE TOPS SET FLUSH WITH THE EXISTING PAVEMENT GRADE. IN LANDSCAPED AREAS, ALL FRAMES SHALL BE 0.1' ABOVE GRADE.

15. TEMPORARY PAVEMENT SHALL BE PLACED WITHIN 48 HOURS OF COMPLETION OF BACKFILL OPERATIONS WITHIN THE EXISTING PAVEMENT LIMITS.

16. CONTRACTOR SHALL MAINTAIN ALL TRAFFIC IN ALL AREAS IN ACCORDANCE WITH THE NYSDOT MANUAL OF UNIFORM TRAFFIC CONTROL DEVICES.

17. ALL EXCAVATIONS SHALL BE PROTECTED AT THE END OF EACH WORK DAY PER OSHA AND NYSDOT REQUIREMENTS.

18. WITHIN NYSDOT ROW ALL OPEN EXCAVATIONS TO BE PROTECTED BY CONCRETE BARRIERS OR BE COVERED BY A STEEL PLATE, 3/4" THICK MINIMUM. A SINGLE PLATE SHOULD COVER THE ENTIRE EXCAVATION AND HAVE ENOUGH BEARING ON SURROUNDING SURFACES TO SUPPORT A VEHICLE.

19. CONTRACTOR SHALL TAKE CARE TO PREVENT DAMAGE TO EXISTING UTILITIES. UTILITIES DAMAGED BY CONTRACTOR SHALL BE IMMEDIATELY REPAIRED BY CONTRACTOR AT THE CONTRACTOR'S EXPENSE. IF DURING EXCAVATION PREVIOUSLY DAMAGED UTILITIES ARE UNCOVERED, CONTRACTOR SHALL DOCUMENT THE DAMAGE AND REPORT DAMAGE TO THE APPROPRIATE OWNER.

20. DEPTH OF BURY FOR EXISTING CABLED UTILITIES FIBER / ELECTRICAL / TELECOM AND WATERLINES UNKNOWN. ASSUMED DEPTH OF BURY FOR CABLED UTILITIES IS 30" UNLESS OTHERWISE SHOWN. ASSUMED DEPTH OF BURY FOR WATERLINES IS 5' UNLESS OTHERWISE SHOWN.

21. CONTRACTOR TO COORDINATE ALL DRIVEWAY CROSSINGS WITH THE PROPERTY OWNERS PRIOR TO EXCAVATING. ACCESS TO ALL DRIVEWAYS FOR THE RESIDENTS AND COMMERCIAL PROSPERITIES WILL NEED TO BE MAINTAINED DURING THE PROJECT. ALL EXCAVATIONS IN THE ENTRANCES/DRIVEWAYS WILL NEED TO BE BACKFILLED AT THE END OF EACH WORKDAY, OR STEEL PLATES SHALL BE INSTALLED TO ALLOW ACCESS DURING CONSTRUCTION. REFER TO THE EM&CP FOR EMERGENCY ACCESS MANAGEMENT PLAN.

22. ALL WORK WITHIN AGRICULTURAL LANDS WILL BE PERFORMED IN COMPLIANCE WITH APPLICABLE NEW YORK STATE DEPARTMENT OF AGRICULTURE AND MARKETS (NYSDAM) GUIDANCE INCLUDING "NYSDAM GUIDELINES FOR CONSTRUCTION MITIGATIONS FOR AGRICULTURAL LANDS IN AGRICULTURAL AREAS". RESTORATION WORK WILL FOLLOW APPLICABLE SECTIONS OF NYSDAM GUIDANCE "FERTILIZING LIME, AND SEEDING RECOMMENDATIONS FOR RESTORATION OF CONSTRUCTION PROJECTS ON FARMLAND IN NYS".

CANADIAN PACIFIC RAILWAY (CPR) NOTES:

1. ALL WORK PERFORMED WITHIN THE RAILROAD RIGHT OF WAY OR ANY WORK THAT HAS THE POTENTIAL TO IMPACT THE RAILROAD RIGHT OF WAY SHALL SHALL BE DESIGNED AND PERFORMED IN ACCORDANCE WITH THE FOLLOWING:
   1.a. CANADIAN PACIFIC RAILWAY – UTILITY SPECIFICATIONS AND APPLICATION PROCESS (US) – HTTPS://WWW.CPR.CA/EN/CHOOSE-RAIL-SITE/DOCUMENTS/CP-UTILITY-SPECS-AND-APPLICATION-PROCESS.PDF
   1.b. AMERICAN RAILWAY ENGINEERING AND MAINTENANCE OF WAY ASSOCIATION (AREMA) MANUAL FOR RAILWAY ENGINEERING

2. REFER TO DRAWING C-651 FOR ADDITIONAL CPR NOTES AND REQUIREMENTS.

IT IS A VIOLATION OF LAW FOR ANY PERSON, UNLESS THEY ARE ACTING UNDER THE DIRECTION OF A LICENSED PROFESSIONAL ENGINEER, ARCHITECT, LANDSCAPE ARCHITECT OR LAND SURVEYOR TO ALTER AN ITEM IN ANY WAY. IF AN ITEM BEARING THE STAMP OF A LICENSED PROFESSIONAL IS ALTERED, THE ALTERING ENGINEER, ARCHITECT, LANDSCAPE ARCHITECT OR LAND SURVEYOR SHALL STAMP THE DOCUMENT AND INCLUDE THE NOTATION "ALTERED BY" FOLLOWED BY THEIR SIGNATURE, THE DATE OF SUCH ALTERATION, AND A SPECIFIC DESCRIPTION OF THE ALTERATION.

No.	DATE	SUBMITTAL / REVISION DESCRIPTION	DB	APP
A	07/08/2021	EM&CP REGULATORY SUBMISSION	JM	JR

CHA
III Winners Circle, PO Box 5269
Albany, NY 12205-0269
518.453.4500 . www.chacompanies.com

CHPE Champlain Hudson Power Express

Kiewit

CHAMPLAIN HUDSON POWER EXPRESS
SEGMENT 3 (PACKAGE 1C) WHITEHALL TO FORT ANN
GENERAL NOTES

KIEWIT PROJECT NO.	21162
CHA PROJECT NO.	066076
DRAWING NO.	G-002

DRAWN BY: JTM | DESIGNED BY: JTM | APPROVED BY: JPR | SCALE AS NOTED | REV. NO. X | DATE 07/08/2022 | SH.NO. XXX OF XXX

File: V:\PROJECTS\ANY\K6\066076.000\09_DESIGN\DRAWINGS\01_SHEETS\DESIGN PACKAGE 1\DESIGN PACKAGE 1C\066076_P1C - G-002 GENERAL NOTES.DWG Saved: 7/7/2022 9:13:15 AM Plotted: 7/7/2022 3:35:59 PM Current User: Evans, Josh LastSavedBy: 7839

LEGEND & ABBRIVIATIONS

HH	EXIST. FIBER OPTIC LINE HANDHOLE
P	EXIST. FIBER OPTIC LINE PEDESTAL
DH	EXIST. FIBER OPTIC LINE DOGHOUSE
MH	EXIST. FIBER OPTIC LINE MANHOLE
V	EXIST. FIBER OPTIC LINE VAULT
BP	EXIST. FIBER OPTIC LINE BORE PIT
LB	EXIST. FIBER OPTIC LOCK BOX
	EXIST. GROUND ROD
FIBER MARK	EXIST. FIBER OPTIC MARKER POST
100	EXIST. FIBER STORAGE
HYD	EXIST. FIRE HYDRANT
WV	EXIST. WATER VALVE
W	EXIST. WATER MANHOLE
WATER MARK	EXIST. WATER MARKER
SS	EXIST. SANITARY SEWER MANHOLE
VENT	EXIST. SANITARY SEWER VENT
ST	EXIST. STORM SEWER MANHOLE
CB	EXIST. STORM SEWER CATCH BASIN
INV.	EXIST. CULVERT INVERT
G	EXIST. GAS MANHOLE
GV	EXIST. GAS VALVE
GAS MARK	EXIST. GAS MARKER
VENT	EXIST. GAS PIPELINE VENT
	EXIST. LIGHT POLE
UP	EXIST. UTILITY POLE
PP	EXIST. ELEC. POLE
	EXIST. TRAFFIC LIGHT
E	EXIST. ELEC. METER
E	EXIST. ELEC. MANHOLE
TR	EXIST. ELEC. TRANSFORMER
V	EXIST. ELEC. VAULT
HH	EXIST. ELEC. HANDHOLE
P	EXIST. ELEC. PEDESTAL/BOX
ELEC MARK	EXIST. ELEC. MARKER POST
	EXIST. ELEC. GUY ANCHOR/WIRE
T	EXIST. TELE. RISER/BOX
T	EXIST. TELE. MANHOLE
HH	EXIST. TELE. HANDHOLE
V	EXIST. TELE. VAULT
P	EXIST. TELE. PEDESTAL
DH	EXIST. TELE. DOGHOUSE
TELEPHONE MARK	EXIST. TELE. MARKER POST
	EXIST. TELE. JUNCTION BOX
TB	EXIST. TRAFFIC SIGNAL BOX
	EXIST. CELL TOWER
CB	EXIST. CABLE BOX
	EXISTING MANHOLE UNKNOWN
U	EXISTING UTILITY BOX UNKNOWN
	EXISTING ANTENNA
CAPPED IRON ROD	EXISTING CAPPED IRON ROD
IRON PIPE	EXISTING IRON PIPE
CONCRETE BOUNDARY	EXISTING CONCRETE MONUMENT
POST	EXISTING POST
	EXISTING REFLECTOR MARKER
(SYM.)	EXISTING SYMBOL

SIGN	EXISTING SIGN
	EXIST. STRUCTURE POST
	EXIST. STRUCTURE MAILBOX
XX-#	EXIST. WETLAND FLAG
G — G	EXIST. GAS LINE
UT — UT	EXIST. UNDERGROUND TELE.
FO — FO	EXIST. FIBER OPTIC
OT — OT	EXIST. OVERHEAD TELE.
UE — UE	EXIST. UNDERGROUND ELEC.
OE — OE	EXIST. OVERHEAD ELEC.
ST — ST	EXIST. CULVERT
SS — SS	EXIST. SANITARY SEWER
ST — ST	EXIST. STORM SEWER
W — W	EXIST. POTABLE WATER LINE
	EXIST. RAILROAD TRACK
	EXIST. WETLANDS
CERTIFIED ROUTE MP XX	CERTIFIED ROUTE PROVIDED BY CHPE KMZ
	EXIST. CONTOUR, INDEX
	EXIST. CONTOUR, DEPRESSION INDEX
	EXIST. CONTOUR, INTERMEDIATE
	EXIST. CONTOUR, DEPRESSION INTERMEDIATE
109.7	EXIST. SPOT ELEVATION
	EXIST. CULTURAL DEBRIS
	EXIST. CULTURAL FIELD LINE
	EXIST. CULTURAL LANDSCAPE AREA
	EXIST. CULTURAL PILE
	EXIST. CULTURAL STORAGE AREA
	EXIST. HYDROGRAPHIC
	EXIST. CULVERT
	EXIST. INUNDATED AREA
	EXIST. RIP-RAP
	EXIST. STREAM
	EXIST. SWAMP
WL 10.5	WATER LEVEL
	EXIST. NATURAL BOULDER
	EXIST. NATURAL SHRUB LINE
	EXIST. NATURAL TREE LINE
	EXIST. NATURAL SINGLE TREE/BUSH
	EXIST. STRUCTURAL BUILDING
	EXIST. PAVED DRIVE
	EXIST. PAVED ROAD
	EXIST. PAVED SHOULDER
	EXIST. PAVED SIDEWALK
	EXIST. GUARDRAIL
	EXIST. RAILROAD
	EXIST. TRAIL
X	EXIST. FENCE
	EXIST. WALL
	EXIST. RETAINING WALL
XX	EXIST. MILEPOST NUMBER
	EXIST. MAPPING BOUNDARY
ELE 1550 NAD	EXIST. GROUND CONTROL
	PROP. RIGHT-OF-WAY
	PROP. ABUTTER

	PEM – PALUSTRINE EMERGENT
	PSS – PALUSTRINE SCRUB-SHRUB
	PFO – PALUSTRINE FORESTED
	PUB – PALUSTRINE UNCONSOLIDATED BOTTOM
	L1 – LACUSTRINE LIMNETIC
	L2 – LACUSTRINE LITTORAL
	PROP. NYSDEC FWW 100-FOOT ADJACENT AREA
	PROP. GIS – WETLAND
	PROP. JD BOUNDARY
	PROP. WETLAND PROTECTION FENCE
	PROP. COMPOST FILTER SOCK (OR SILT SOCK)
LOW	PROP. LIMITS OF WORK/DISTURBANCE
	PROP. LIMITS OF CLEARING/LIMITS OF WORK IN CLEARING AREAS
	PROP. CONCRETE WASHOUT
	PROP. ACCESS ROADS
	PROP. SPLICE VAULT
	PROP. LINK BOX HANDHOLE
	PROP. FIBER SPLICE HANDHOLE
	PROP. BORING LOCATION
XXXXX+XX	PROP. ALIGNMENT STATIONING
	PROP. RIGHT-OF-WAY
	PROP. ABUTTER
	PROP. ALIGNMENT CENTERLINE

APP	APPROVED
CL	CENTERLINE
CMP	CORRUGATED METAL PIPE
CONC	CONCRETE
DB	DESIGNED BY
DEC	NEW YORK STATE DEPARTMENT OF ENVIRONMENTAL CONSERVATION
DEG	DEGREES
DR	DRIVE
DZ	DEVIATION ZONE
E	EASTING
ELECTRIC	ELECTRIC CABLE
ELEV	ELEVATION
FIBER	FIBER OPTIC CABLE
FT	FEET
GAS	GAS PIPE
H	HORIZONTAL
HDD	HORIZONTAL DIRECTIONAL DRILLING
HVDC	HIGH-VOLTAGE DIRECT CURRENT TRANSMISSION LINE
INV	INVERT ELEVATION
LOW	LIMITS OF WORK
MAX	MAXIMUM
MIN	MINIMUM
N	NORTHING
NO	NUMBER
NY	NEW YORK
P#	PACKAGE #
PVC	POLYVINYL CHLORIDE
PVI	POINT OF VERTICAL INTERSECTION
R	RADIUS
RCP	REINFORCED CONCRETE PIPE
RD	ROAD
REV	REVISION
ROW	RIGHT-OF-WAY
RTE	ROUTE
SEWER	SANITARY SEWER PIPE
SH	SHEET
ST	STREET
STA	STATION
STORM	STORM DRAIN PIPE
TELECOM	TELECOMMUNICATIONS CABLE
TEMP	TEMPORARY
TR	THERMAL RESISTIVITY
TYP	TYPICAL
V	VERTICAL
WATER	WATERLINE

SURVEY NOTES:

1. A ROW, UTILITY & WETLAND SURVEY PREPARED IN THE FIELD BY CONTROL POINT ASSOCIATES, INC., AND OTHER REFERENCE MATERIAL AS LISTED HEREON.
2. ELEVATIONS REFER TO THE NORTH AMERICAN VERTICAL DATUM OF 1988 (NAVD88), BASED ON GPS OBSERVATIONS TAKEN AT THE TIME OF THE SURVEY.
3. NORTH ORIENTATION SHOWN REFERS TO THE NAD83 STATE PLANE COORDINATE SYSTEM – NEW YORK EAST ZONE BASED ON GPS OBSERVATIONS TAKEN AT THE TIME OF THE FIELD SURVEY.
4. LOCATION OF UNDERGROUND UTILITIES ARE APPROXIMATE. LOCATIONS AND SIZES ARE BASED ON UTILITY MARK-OUTS, ABOVE GROUND STRUCTURES THAT WERE VISIBLE & ACCESSIBLE IN THE FIELD, AND THE MAPS AS LISTED IN THE REFERENCES AVAILABLE AT THE TIME OF THE SURVEY. AVAILABLE ASBUILT PLANS AND UTILITY MARKOUT DOES NOT ENSURE MAPPING OF ALL UNDERGROUND UTILITIES AND STRUCTURES. BEFORE ANY EXCAVATION IS TO BEGIN, ALL UNDERGROUND UTILITIES SHOULD BE VERIFIED AS TO THEIR LOCATION, SIZE AND TYPE BY THE PROPER UTILITY COMPANIES. CONTROL POINT ASSOCIATES, INC. DOES NOT GUARANTEE THE UTILITIES SHOWN COMPRISE ALL SUCH UTILITIES IN THE AREA EITHER IN SERVICE OR ABANDONED.

SUBSURFACE UTILITY ENGINEERING NOTES:

A QUALITY LEVEL SYSTEM IS UTILIZED TO IDENTIFY THE SOURCE OF THE UNDERGROUND UTILITY INFORMATION. THE METHOD OF DETERMINATION IS BASED ON CONTRACTUAL AGREEMENT WITH THE CLIENT AND IS DEPICTED ON THE SURVEY BY THE LINE TYPES SHOWN IN THE DRAWING LEGEND. FOR REFERENCE, THE QUALITY LEVELS ARE AS FOLLOWS:

QUALITY LEVEL B – UTILITY LOCATION DATA IS COLLECTED THROUGH GEOPHYSICAL SENSING TECHNOLOGY TO SUPPLEMENT SURFACE FEATURES AND OR REFERENCE MAPPING. INCLUDES MARKOUT BY CONTROL POINT ASSOCIATES, INC.

CHPE Champlain Hudson Power Express

Kiewit

CHA
III Winners Circle, PO Box 5269
Albany, NY 12205-0269
518.453.4500 . www.chacompanies.com

IT IS A VIOLATION OF LAW FOR ANY PERSON, UNLESS THEY ARE ACTING UNDER THE DIRECTION OF A LICENSED PROFESSIONAL ENGINEER, ARCHITECT, LANDSCAPE ARCHITECT OR LAND SURVEYOR TO ALTER AN ITEM IN ANY WAY. IF AN ITEM BEARING THE STAMP OF A LICENSED PROFESSIONAL IS ALTERED, THE ALTERING ENGINEER, ARCHITECT, LANDSCAPE ARCHITECT OR LAND SURVEYOR SHALL STAMP THE DOCUMENT AND INCLUDE THE NOTATION "ALTERED BY" FOLLOWED BY THEIR SIGNATURE, THE DATE OF SUCH ALTERATION, AND A SPECIFIC DESCRIPTION OF THE ALTERATION.

No.	DATE	SUBMITTAL / REVISION DESCRIPTION	DB	APP
A	07/08/2021	EM&CP REGULATORY SUBMISSION	JM	JR

DRAWN BY: XXX DESIGNED BY: XXX APPROVED BY: XXX

CHAMPLAIN HUDSON POWER EXPRESS
SEGMENT 3 (PACKAGE 1C) WHITEHALL TO FORT ANN
LEGEND

SCALE AS NOTED
REV. NO. X

KIEWIT PROJECT NO. 21162
CHA PROJECT NO. 066076
DRAWING NO. G-003
DATE 07/08/2022
SH.NO. XXX OF XXX

CONTOUR, INDEX

File: V:\PROJECTS\ANY\K6\066076.000\09_DESIGN\DRAWINGS\01_SHEETS\DESIGN PACKAGE 1\DESIGN PACKAGE 1C\066076_1C_G-004 LEGEND.DWG Saved: 7/5/2022 3:19:42 PM Plotted: 7/7/2022 4:46:52 PM Current User: McEnaney III, James LastSavedBy: 7899

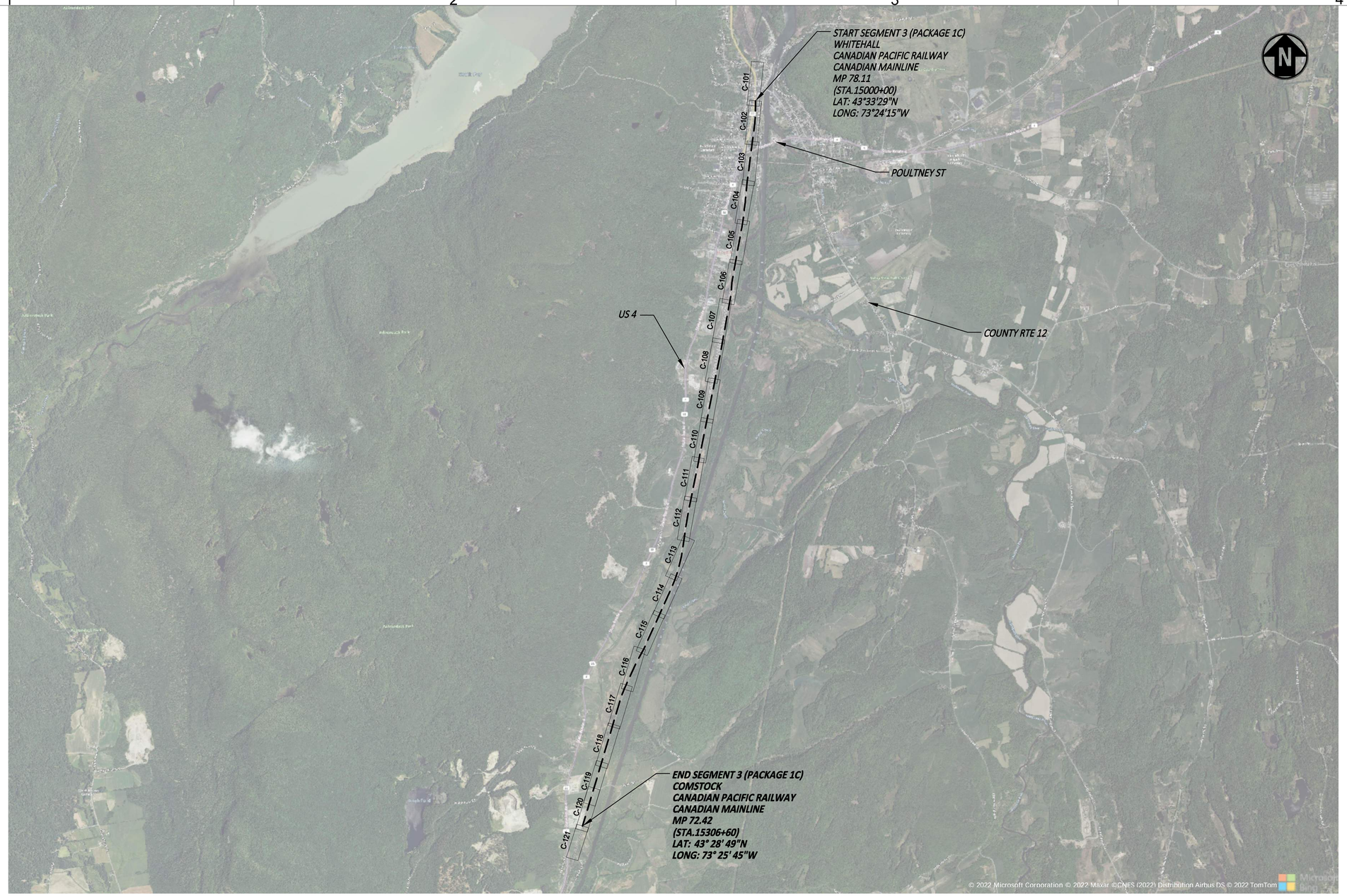

PLAN AND PROFILE KEY MAP

SCALE: 1" = 2000'

CHPE Champlain Hudson Power Express

Kiewit

CHA
III Winners Circle, PO Box 5269
Albany, NY 12205-0269
518.453.4500 . www.chacompanies.com

IT IS A VIOLATION OF LAW FOR ANY PERSON, UNLESS THEY ARE ACTING UNDER THE DIRECTION OF A LICENSED PROFESSIONAL ENGINEER, ARCHITECT, LANDSCAPE ARCHITECT OR LAND SURVEYOR TO ALTER AN ITEM IN ANY WAY. IF AN ITEM BEARING THE STAMP OF A LICENSED PROFESSIONAL IS ALTERED, THE ALTERING ENGINEER, ARCHITECT, LANDSCAPE ARCHITECT OR LAND SURVEYOR SHALL STAMP THE DOCUMENT AND INCLUDE THE NOTATION "ALTERED BY" FOLLOWED BY THEIR SIGNATURE, THE DATE OF SUCH ALTERATION, AND A SPECIFIC DESCRIPTION OF THE ALTERATION.

No.	DATE	SUBMITTAL / REVISION DESCRIPTION	DB	APP
A	07/08/2021	EM&CP REGULATORY SUBMISSION	JM	JR

CHAMPLAIN HUDSON POWER EXPRESS
SEGMENT 3 (PACKAGE 1C) WHITEHALL TO FORT ANN
KEYPLAN

DRAWN BY: XXX | DESIGNED BY: XXX | APPROVED BY: XXX | SCALE AS NOTED | REV. NO. X

KIEWIT PROJECT NO. 21162
CHA PROJECT NO. 066076
DRAWING NO. G-004
DATE 07/08/2022
SH.NO. XXX OF XXX

File: V:\PROJECTS\ANY\K6\066076.000\09_DESIGN\DRAWINGS\01_SHEETS\DESIGN PACKAGE 1\DESIGN PACKAGE 1C\066076_1C_G-005.DWG Saved: 7/8/2022 11:08:35 AM Plotted: 7/8/2022 11:09:28 AM Current User: Evans, Josh LastSavedBy: 4894

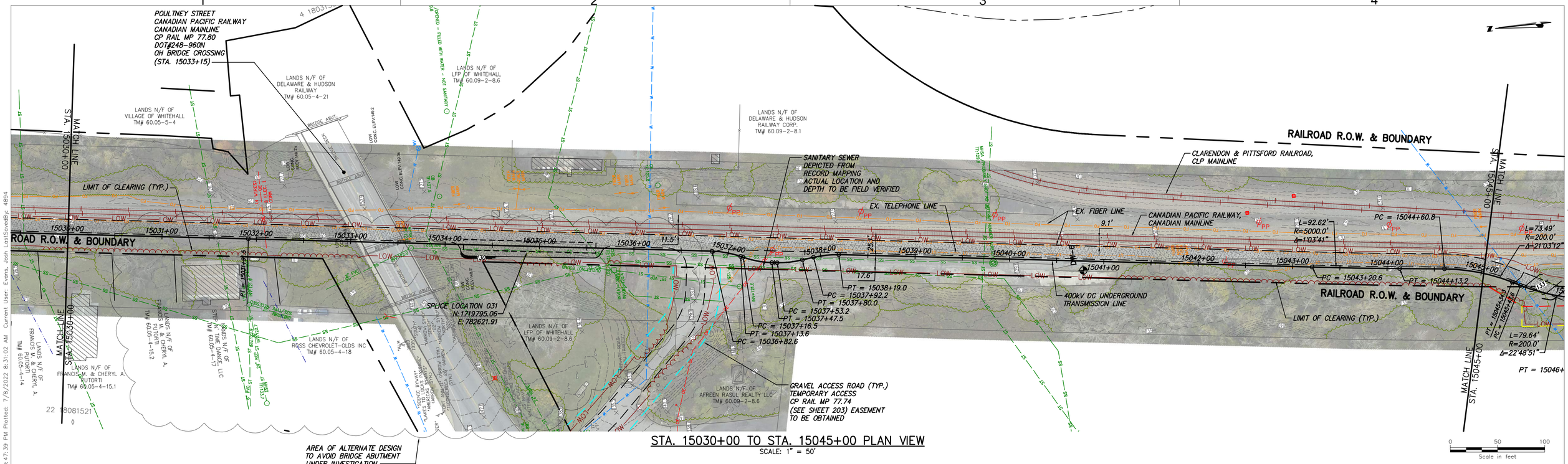

STA. 15030+00 TO STA. 15045+00 PLAN VIEW

SCALE: 1" = 50'

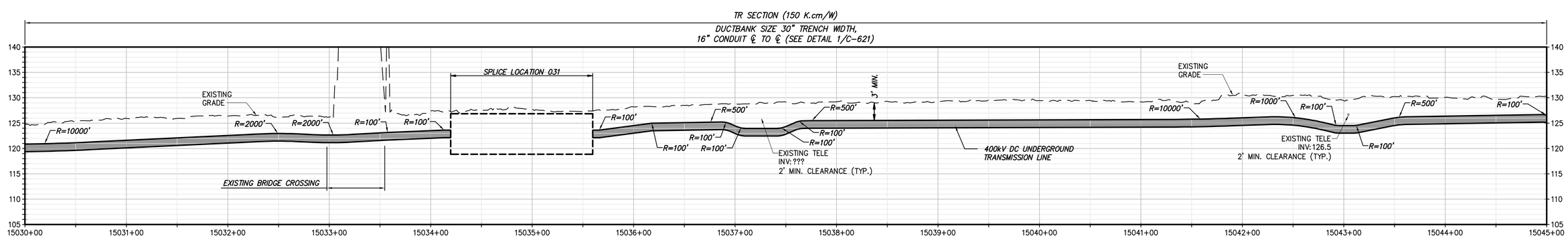

STA. 15030+00 TO STA. 15045+00 PROFILE VIEW

SCALE: H: 1" = 50' V: 1"=10'

CHPE Champlain Hudson Power Express

Kiewit

CHA
III Winners Circle, PO Box 5269
Albany, NY 12205-0269
518.453.4500 . www.chacompanies.com

IT IS A VIOLATION OF LAW FOR ANY PERSON, UNLESS THEY ARE ACTING UNDER THE DIRECTION OF A LICENSED PROFESSIONAL ENGINEER, ARCHITECT, LANDSCAPE ARCHITECT OR LAND SURVEYOR TO ALTER AN ITEM IN ANY WAY. IF AN ITEM BEARING THE STAMP OF A LICENSED PROFESSIONAL IS ALTERED, THE ALTERING ENGINEER, ARCHITECT, LANDSCAPE ARCHITECT OR LAND SURVEYOR SHALL STAMP THE DOCUMENT AND INCLUDE THE NOTATION "ALTERED BY" FOLLOWED BY THEIR SIGNATURE, THE DATE OF SUCH ALTERATION, AND A SPECIFIC DESCRIPTION OF THE ALTERATION.

No.	DATE	SUBMITTAL / REVISION DESCRIPTION	DB	APP
A	07/08/2021	EM&CP REGULATORY SUBMISSION	JM	JR

CHAMPLAIN HUDSON POWER EXPRESS
SEGMENT 3 (PACKAGE 1C) WHITEHALL TO FORT ANN
STA. 15030+00 TO STA 15045+00 PLAN AND PROFILE

KIEWIT PROJECT NO. 21162
CHA PROJECT NO. 066076
DRAWING NO. C-103

DRAWN BY: JTM | DESIGNED BY: JTM | APPROVED BY: JPR | SCALE AS NOTED | REV. NO. X | DATE 07/08/2022 | SH.NO. XXX OF XXX

File: V:\PROJECTS\ANY\K6\066076.000\09_DESIGN\DRAWINGS\01_SHEETS\DESIGN PACKAGE 1\DESIGN PACKAGE 1C\066076_P1C - C-101 - C-105.DWG Saved: 7/7/2022 10:47:39 PM Plotted: 7/8/2022 8:31:02 AM Current User: Evans, Josh LastSavedBy: 4894

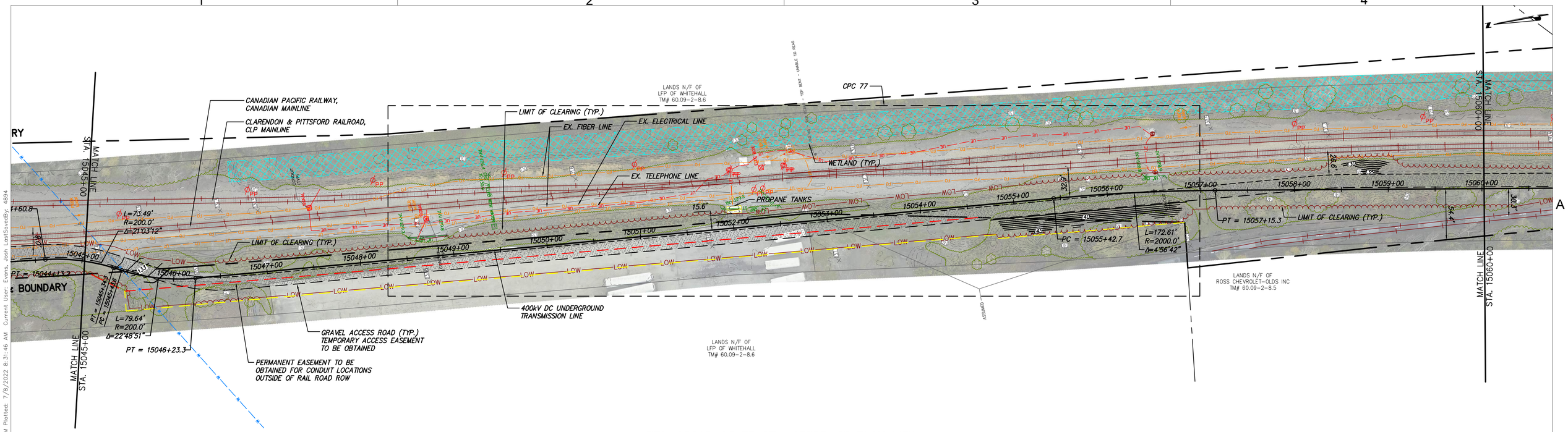

STA. 15045+00 TO STA. 15060+00 PLAN VIEW

SCALE: 1" = 50'

0 50 100
Scale in feet

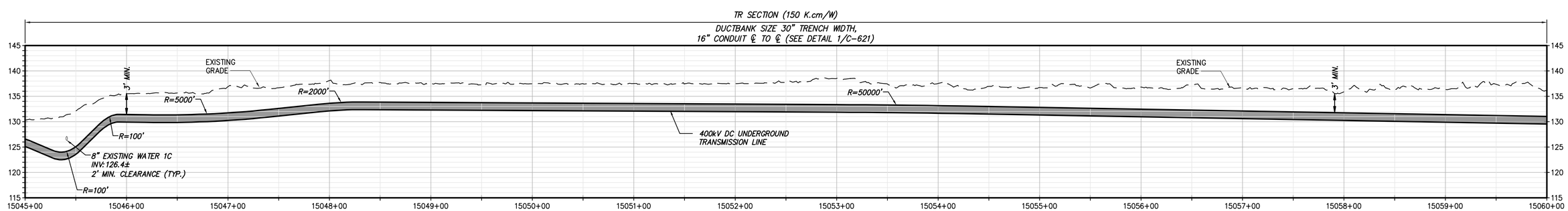

STA. 15045+00 TO STA. 15060+00 PROFILE VIEW

SCALE: H:1" = 50' V:1" = 10'

CHPE Champlain Hudson Power Express

Kiewit

CHA
III Winners Circle, PO Box 5269
Albany, NY 12205-0269
518.453.4500 . www.chacompanies.com

IT IS A VIOLATION OF LAW FOR ANY PERSON, UNLESS THEY ARE ACTING UNDER THE DIRECTION OF A LICENSED PROFESSIONAL ENGINEER, ARCHITECT, LANDSCAPE ARCHITECT OR LAND SURVEYOR TO ALTER AN ITEM IN ANY WAY. IF AN ITEM BEARING THE STAMP OF A LICENSED PROFESSIONAL IS ALTERED, THE ALTERING ENGINEER, ARCHITECT, LANDSCAPE ARCHITECT OR LAND SURVEYOR SHALL STAMP THE DOCUMENT AND INCLUDE THE NOTATION "ALTERED BY" FOLLOWED BY THEIR SIGNATURE, THE DATE OF SUCH ALTERATION, AND A SPECIFIC DESCRIPTION OF THE ALTERATION.

No.	DATE	SUBMITTAL / REVISION DESCRIPTION	DB	APP
A	07/08/2021	EM&CP REGULATORY SUBMISSION	JM	JR

CHAMPLAIN HUDSON POWER EXPRESS
SEGMENT 3 (PACKAGE 1C) WHITEHALL TO FORT ANN
STA. 15045+00 TO STA 15060+00 PLAN AND PROFILE

DRAWN BY: JTM | DESIGNED BY: JTM | APPROVED BY: JPR | SCALE: AS NOTED | REV. NO. X | DATE: 07/08/2022 | SH.NO. XXX OF XXX

KIEWIT PROJECT NO. 21162
CHA PROJECT NO. 066076
DRAWING NO. C-104

File: V:\PROJECTS\ANY\K6\066076.000\09_DESIGN\DRAWINGS\01_SHEETS\DESIGN PACKAGE 1\DESIGN PACKAGE 1C\066076_P1C - C-101 - C-105.DWG Saved: 7/7/2022 10:47:39 PM Plotted: 7/8/2022 8:31:46 AM Current User: Evans, Josh LastSavedBy: 4894

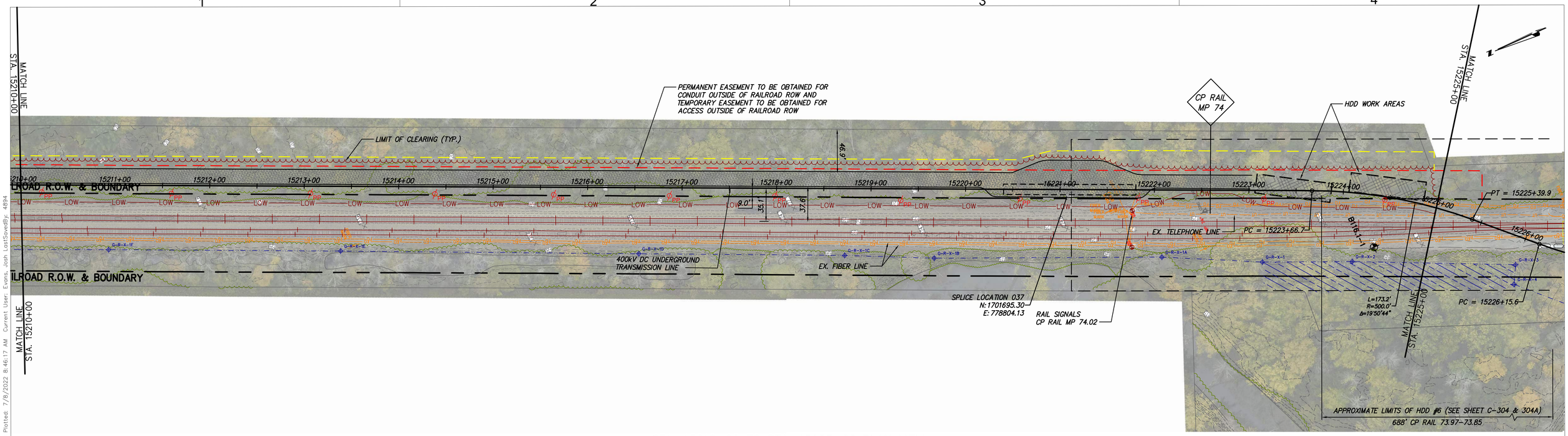

STA. 15210+00 TO STA. 15225+00 PLAN VIEW

SCALE: 1" = 50'

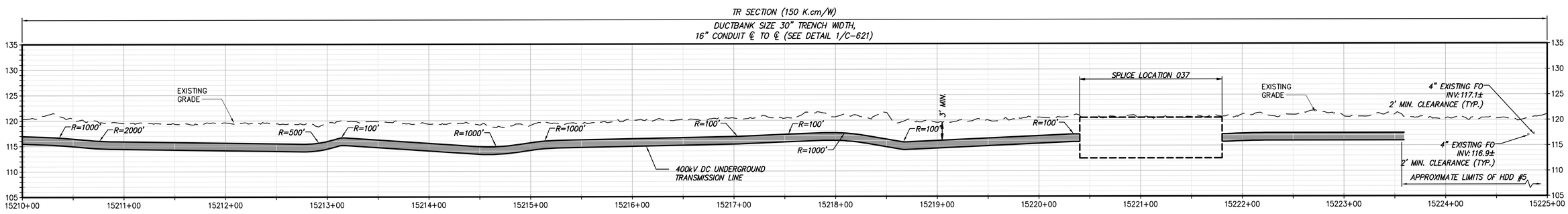

STA. 15210+00 TO STA. 15225+00 PROFILE VIEW

SCALE: H:1" = 50' V:1" = 10'

CHPE Champlain Hudson Power Express

Kiewit

CHA
III Winners Circle, PO Box 5269
Albany, NY 12205-0269
518.453.4500 . www.chacompanies.com

IT IS A VIOLATION OF LAW FOR ANY PERSON, UNLESS THEY ARE ACTING UNDER THE DIRECTION OF A LICENSED PROFESSIONAL ENGINEER, ARCHITECT, LANDSCAPE ARCHITECT OR LAND SURVEYOR TO ALTER AN ITEM IN ANY WAY. IF AN ITEM BEARING THE STAMP OF A LICENSED PROFESSIONAL IS ALTERED, THE ALTERING ENGINEER, ARCHITECT, LANDSCAPE ARCHITECT OR LAND SURVEYOR SHALL STAMP THE DOCUMENT AND INCLUDE THE NOTATION "ALTERED BY" FOLLOWED BY THEIR SIGNATURE, THE DATE OF SUCH ALTERATION, AND A SPECIFIC DESCRIPTION OF THE ALTERATION.

No.	DATE	SUBMITTAL / REVISION DESCRIPTION	DB	APP
A	07/08/2021	EM&CP REGULATORY SUBMISSION	JM	JR

CHAMPLAIN HUDSON POWER EXPRESS
SEGMENT 3 (PACKAGE 1C) WHITEHALL TO FORT ANN
STA. 15210+00 TO STA 15225+00 PLAN AND PROFILE

KIEWIT PROJECT NO. 21162
CHA PROJECT NO. 066076
DRAWING NO. C-115

DRAWN BY: JTM | DESIGNED BY: JTM | APPROVED BY: JPR | SCALE AS NOTED | REV. NO. X | DATE 07/08/2022 | SH.NO. XXX OF XXX

File: V:\PROJECTS\ANY\K6\066076.000\09_DESIGN\DRAWINGS\01_SHEETS\DESIGN PACKAGE 1\DESIGN PACKAGE 1C\066076_P1C - C-111 - C-115.DWG Saved: 7/7/2022 10:19:44 PM Plotted: 7/8/2022 8:46:17 AM Current User: Evans, Josh LastSavedBy: 4894

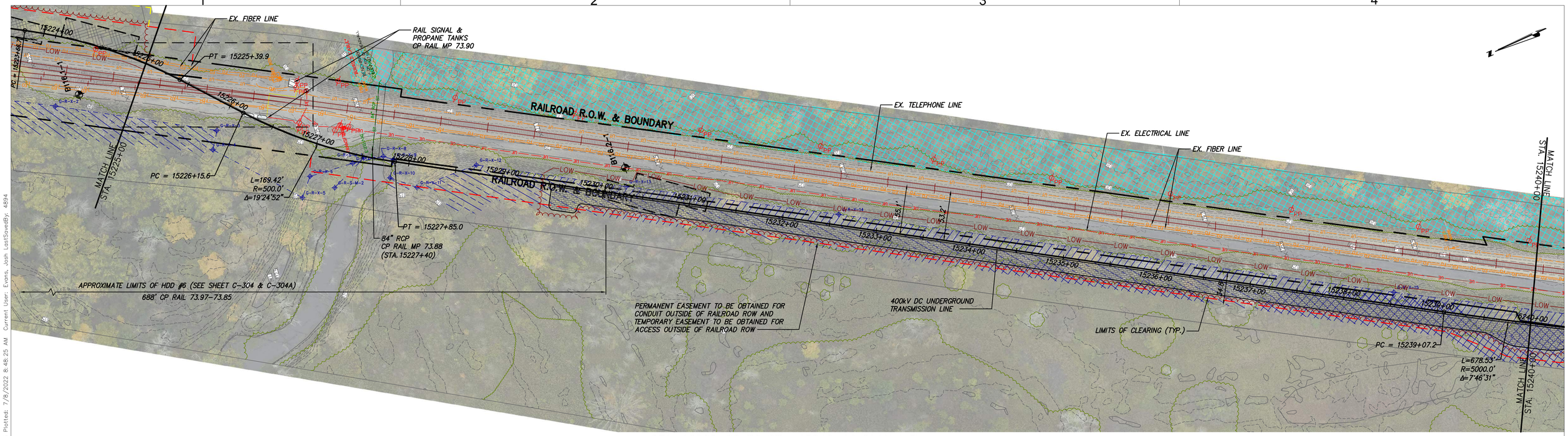

STA. 15225+00 TO STA. 15240+00 PLAN VIEW

SCALE: 1" = 50'

0 50 100
Scale in feet

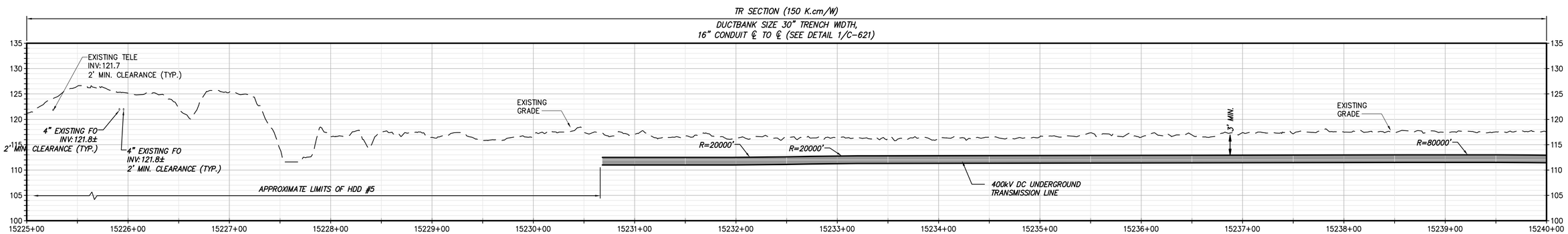

STA. 15225+00 TO STA. 15240+00 PROFILE VIEW

SCALE: H:1" = 50' V:1" = 10'

CHPE Champlain Hudson Power Express

Kiewit

CHA
III Winners Circle, PO Box 5269
Albany, NY 12205-0269
518.453.4500 . www.chacompanies.com

IT IS A VIOLATION OF LAW FOR ANY PERSON, UNLESS THEY ARE ACTING UNDER THE DIRECTION OF A LICENSED PROFESSIONAL ENGINEER, ARCHITECT, LANDSCAPE ARCHITECT OR LAND SURVEYOR TO ALTER AN ITEM IN ANY WAY. IF AN ITEM BEARING THE STAMP OF A LICENSED PROFESSIONAL IS ALTERED, THE ALTERING ENGINEER, ARCHITECT, LANDSCAPE ARCHITECT OR LAND SURVEYOR SHALL STAMP THE DOCUMENT AND INCLUDE THE NOTATION "ALTERED BY" FOLLOWED BY THEIR SIGNATURE, THE DATE OF SUCH ALTERATION, AND A SPECIFIC DESCRIPTION OF THE ALTERATION.

No.	DATE	SUBMITTAL / REVISION DESCRIPTION	DB	APP
A	07/08/2021	EM&CP REGULATORY SUBMISSION	JM	JR

CHAMPLAIN HUDSON POWER EXPRESS
SEGMENT 3 (PACKAGE 1C) WHITEHALL TO FORT ANN
STA. 15225+00 TO STA 15240+00 PLAN AND PROFILE

KIEWIT PROJECT NO. 21162
CHA PROJECT NO. 066076
DRAWING NO. C-116

DRAWN BY: JTM | DESIGNED BY: JTM | APPROVED BY: JPR | SCALE AS NOTED | REV. NO. X | DATE 07/08/2022 | SH.NO. XXX OF XXX

File: V:\PROJECTS\ANY\K6\066076.000\09_DESIGN\DRAWINGS\01_SHEETS\DESIGN PACKAGE 1\DESIGN PACKAGE 1C\066076_P1C - C-116 - C-120.DWG Saved: 7/7/2022 9:54:20 PM Plotted: 7/8/2022 8:46:25 AM Current User: Evans, Josh LastSavedBy: 4894

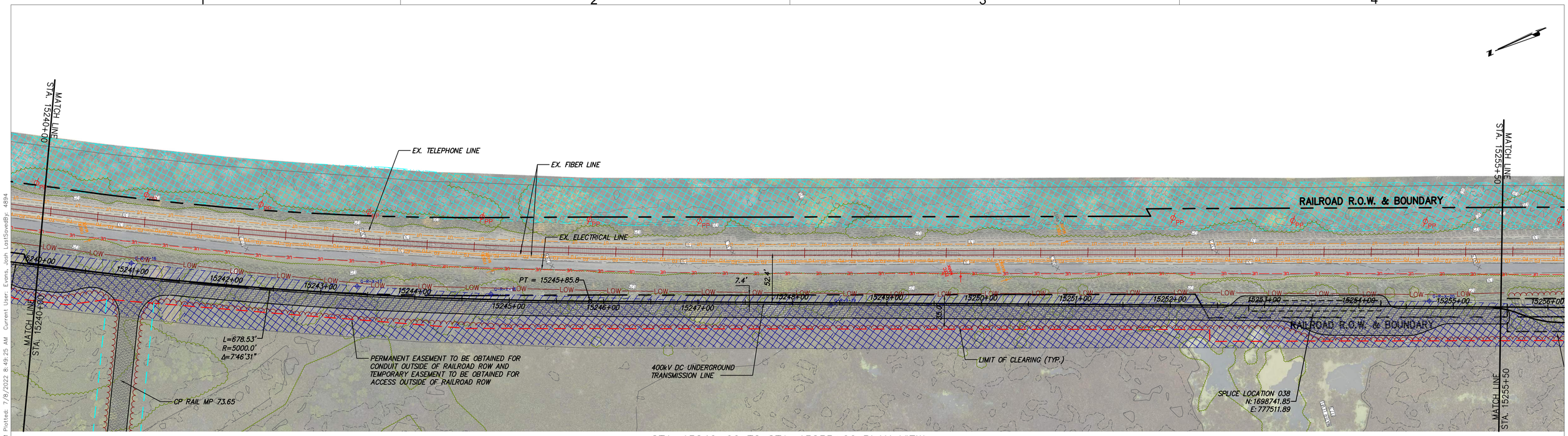

STA. 15240+00 TO STA. 15255+00 PLAN VIEW

SCALE: 1" = 50'

0 50 100
Scale in feet

B

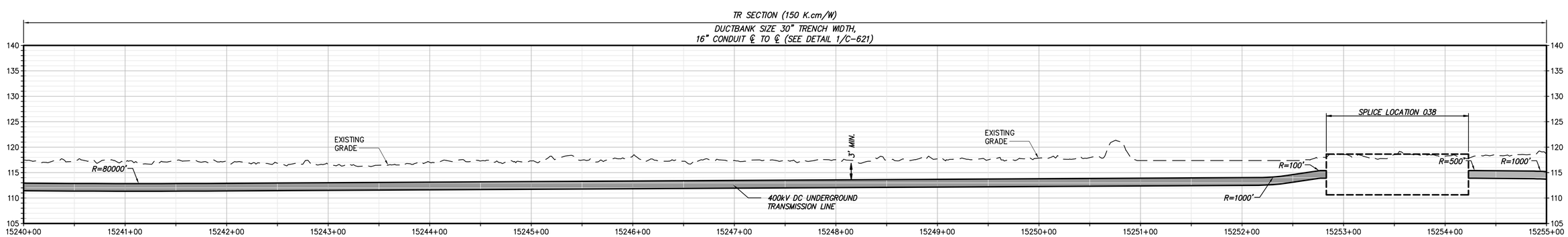

STA. 15240+00 TO STA. 15255+00 PROFILE VIEW

SCALE: H:1" = 50' V:1" = 10'

CHPE Champlain Hudson Power Express

Kiewit

CHA
III Winners Circle, PO Box 5269
Albany, NY 12205-0269
518.453.4500 . www.chacompanies.com

IT IS A VIOLATION OF LAW FOR ANY PERSON, UNLESS THEY ARE ACTING UNDER THE DIRECTION OF A LICENSED PROFESSIONAL ENGINEER, ARCHITECT, LANDSCAPE ARCHITECT OR LAND SURVEYOR TO ALTER AN ITEM IN ANY WAY. IF AN ITEM BEARING THE STAMP OF A LICENSED PROFESSIONAL IS ALTERED, THE ALTERING ENGINEER, ARCHITECT, LANDSCAPE ARCHITECT OR LAND SURVEYOR SHALL STAMP THE DOCUMENT AND INCLUDE THE NOTATION "ALTERED BY" FOLLOWED BY THEIR SIGNATURE, THE DATE OF SUCH ALTERATION, AND A SPECIFIC DESCRIPTION OF THE ALTERATION.

No.	DATE	SUBMITTAL / REVISION DESCRIPTION	DB	APP
A	07/08/2021	EM&CP REGULATORY SUBMISSION	JM	JR

CHAMPLAIN HUDSON POWER EXPRESS
SEGMENT 3 (PACKAGE 1C) WHITEHALL TO FORT ANN
STA. 15240+00 TO STA 15255+00 PLAN AND PROFILE

KIEWIT PROJECT NO. 21162
CHA PROJECT NO. 066076
DRAWING NO. C-117

DRAWN BY: JTM | DESIGNED BY: JTM | APPROVED BY: JPR | SCALE AS NOTED | REV. NO. X | DATE 07/08/2022 | SH.NO. XXX OF XXX

File: V:\PROJECTS\ANY\K6\066076.000\09_DESIGN\DRAWINGS\01_SHEETS\DESIGN PACKAGE 1\DESIGN PACKAGE 1C\066076_P1C - C-116 - C-120.DWG Saved: 7/7/2022 9:54:20 PM Plotted: 7/8/2022 8:49:25 AM Current User: Evans, Josh LastSavedBy: 4894

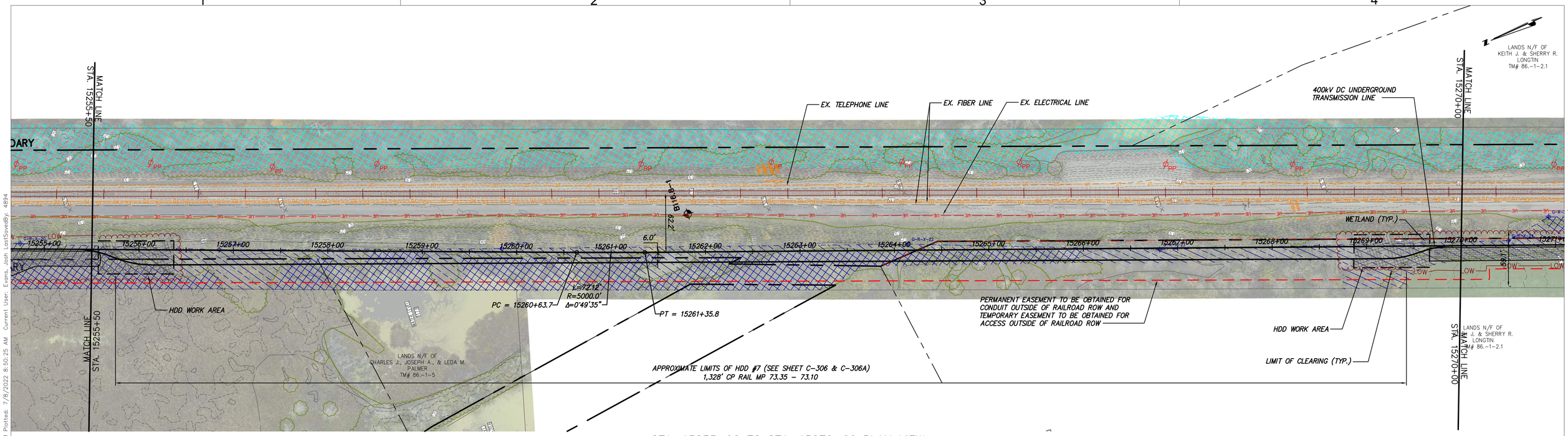

STA. 15255+00 TO STA. 15270+00 PLAN VIEW

SCALE: 1" = 50'

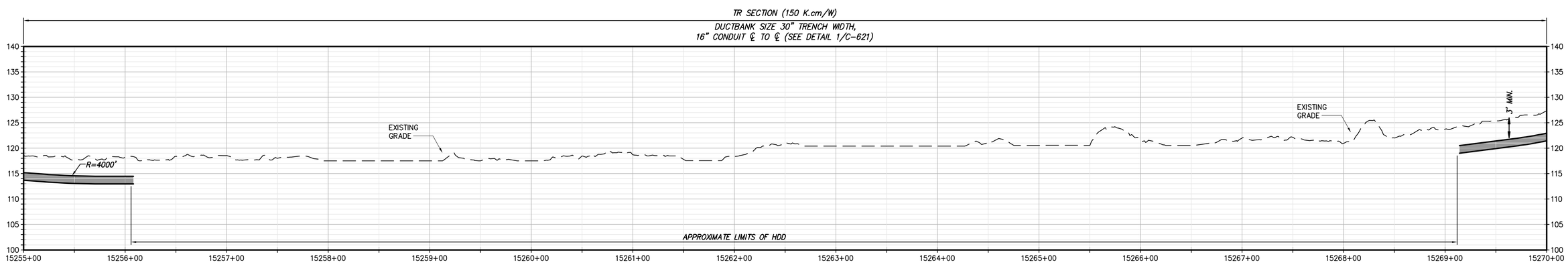

STA. 15255+00 TO STA. 15270+00 PROFILE VIEW

SCALE: H:1" = 50' V:1' = 10'

CHPE Champlain Hudson Power Express

Kiewit

CHA
III Winners Circle, PO Box 5269
Albany, NY 12205-0269
518.453.4500 . www.chacompanies.com

IT IS A VIOLATION OF LAW FOR ANY PERSON, UNLESS THEY ARE ACTING UNDER THE DIRECTION OF A LICENSED PROFESSIONAL ENGINEER, ARCHITECT, LANDSCAPE ARCHITECT OR LAND SURVEYOR TO ALTER AN ITEM IN ANY WAY. IF AN ITEM BEARING THE STAMP OF A LICENSED PROFESSIONAL IS ALTERED, THE ALTERING ENGINEER, ARCHITECT, LANDSCAPE ARCHITECT OR LAND SURVEYOR SHALL STAMP THE DOCUMENT AND INCLUDE THE NOTATION "ALTERED BY" FOLLOWED BY THEIR SIGNATURE, THE DATE OF SUCH ALTERATION, AND A SPECIFIC DESCRIPTION OF THE ALTERATION.

No.	DATE	SUBMITTAL / REVISION DESCRIPTION	DB	APP
A	07/08/2021	EM&CP REGULATORY SUBMISSION	JM	JR

CHAMPLAIN HUDSON POWER EXPRESS
SEGMENT 3 (PACKAGE 1C) WHITEHALL TO FORT ANN
STA. 15255+00 TO STA 15270+00 PLAN AND PROFILE

DRAWN BY: JTM | DESIGNED BY: JTM | APPROVED BY: JPR | SCALE: AS NOTED | REV. NO. X | DATE: 07/08/2022 | SH.NO. XXX OF XXX

KIEWIT PROJECT NO. 21162
CHA PROJECT NO. 066076
DRAWING NO. C-118

File: V:\PROJECTS\ANY\K6\066076.000\09_DESIGN\DRAWINGS\01_SHEETS\DESIGN PACKAGE 1\DESIGN PACKAGE 1C\066076_P1C - C-116 - C-120.DWG Saved: 7/7/2022 9:54:20 PM Plotted: 7/8/2022 8:50:25 AM Current User: Evans, Josh LastSavedBy: 4894

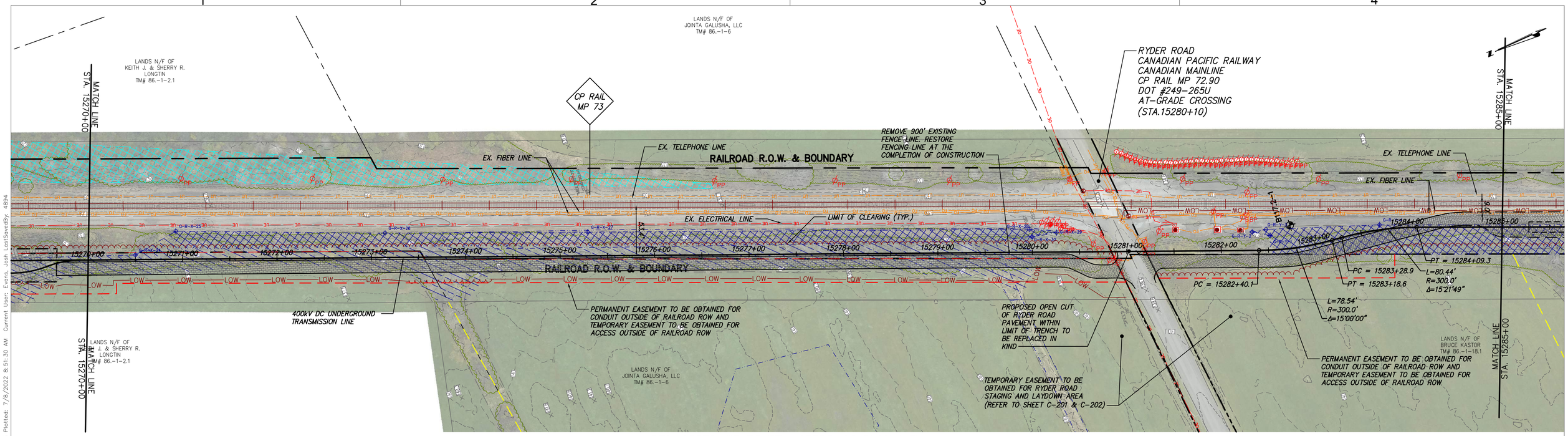

STA. 15270+00 TO STA. 15285+00 PLAN VIEW

SCALE: 1" = 50'

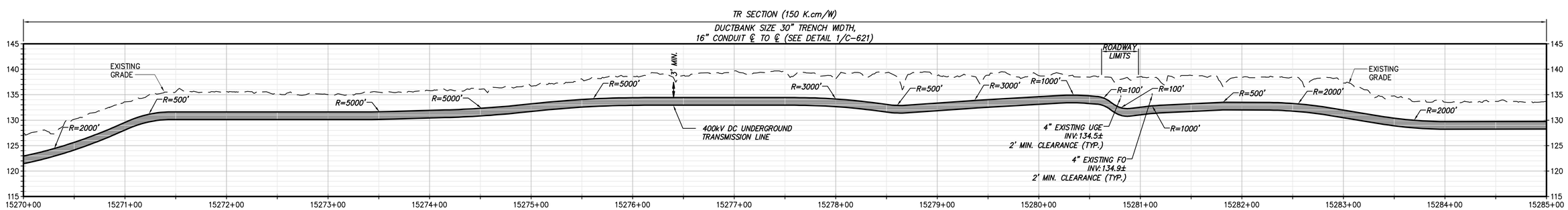

STA. 15270+00 TO STA. 15285+00 PROFILE VIEW

SCALE: H:1" = 50' V:1" = 10'

CHPE Champlain Hudson Power Express

Kiewit

CHA
III Winners Circle, PO Box 5269
Albany, NY 12205-0269
518.453.4500 . www.chacompanies.com

IT IS A VIOLATION OF LAW FOR ANY PERSON, UNLESS THEY ARE ACTING UNDER THE DIRECTION OF A LICENSED PROFESSIONAL ENGINEER, ARCHITECT, LANDSCAPE ARCHITECT OR LAND SURVEYOR TO ALTER AN ITEM IN ANY WAY. IF AN ITEM BEARING THE STAMP OF A LICENSED PROFESSIONAL IS ALTERED, THE ALTERING ENGINEER, ARCHITECT, LANDSCAPE ARCHITECT OR LAND SURVEYOR SHALL STAMP THE DOCUMENT AND INCLUDE THE NOTATION "ALTERED BY" FOLLOWED BY THEIR SIGNATURE, THE DATE OF SUCH ALTERATION, AND A SPECIFIC DESCRIPTION OF THE ALTERATION.

No.	DATE	SUBMITTAL / REVISION DESCRIPTION	DB	APP
A	07/08/2021	EM&CP REGULATORY SUBMISSION	JM	JR

CHAMPLAIN HUDSON POWER EXPRESS
SEGMENT 3 (PACKAGE 1C) WHITEHALL TO FORT ANN
STA. 15270+00 TO STA 15285+00 PLAN AND PROFILE

KIEWIT PROJECT NO.	21162
CHA PROJECT NO.	066076
DRAWING NO.	C-119

DRAWN BY: JTM | DESIGNED BY: JTM | APPROVED BY: JPR | SCALE: AS NOTED | REV. NO. X | DATE: 07/08/2022 | SH.NO. XXX OF XXX

File: V:\PROJECTS\ANY\K6\066076.000\09_DESIGN\DRAWINGS\01_SHEETS\DESIGN PACKAGE 1\DESIGN PACKAGE 1C\066076_P1C - C-116 - C-120.DWG Saved: 7/7/2022 9:54:20 PM Plotted: 7/8/2022 8:51:30 AM Current User: Evans, Josh LastSavedBy: 4894

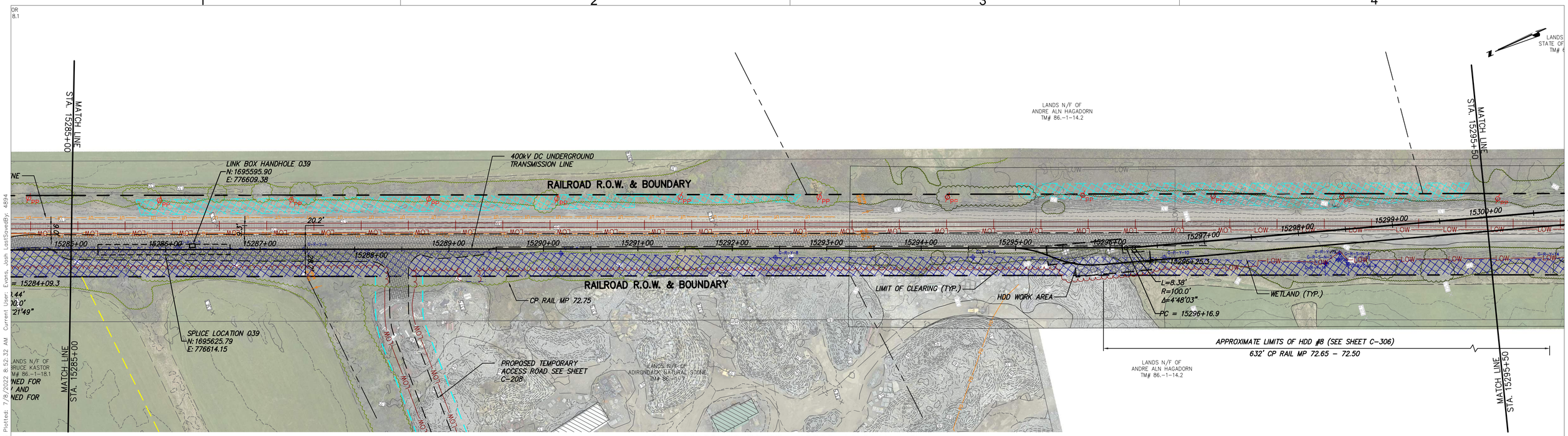

STA. 15285+00 TO STA. 15300+00 PLAN VIEW

SCALE: 1" = 50'

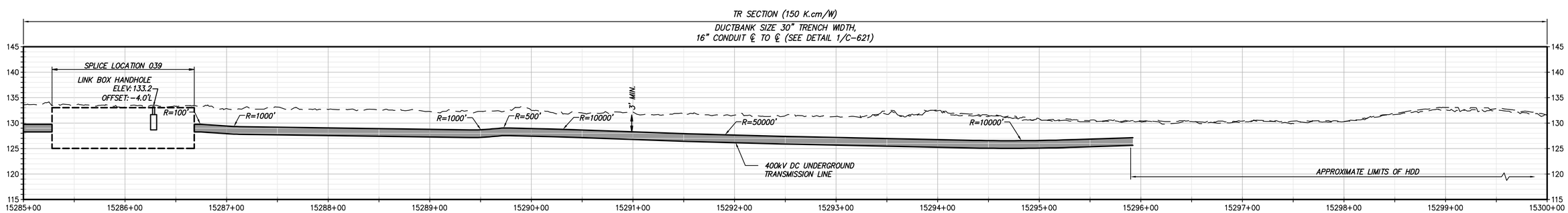

STA. 15285+00 TO STA. 15300+00 PROFILE VIEW

SCALE: H:1" = 50' V:1" = 10'

CHPE Champlain Hudson Power Express

Kiewit

CHA
III Winners Circle, PO Box 5269
Albany, NY 12205-0269
518.453.4500 . www.chacompanies.com

IT IS A VIOLATION OF LAW FOR ANY PERSON, UNLESS THEY ARE ACTING UNDER THE DIRECTION OF A LICENSED PROFESSIONAL ENGINEER, ARCHITECT, LANDSCAPE ARCHITECT OR LAND SURVEYOR TO ALTER AN ITEM IN ANY WAY. IF AN ITEM BEARING THE STAMP OF A LICENSED PROFESSIONAL IS ALTERED, THE ALTERING ENGINEER, ARCHITECT, LANDSCAPE ARCHITECT OR LAND SURVEYOR SHALL STAMP THE DOCUMENT AND INCLUDE THE NOTATION "ALTERED BY" FOLLOWED BY THEIR SIGNATURE, THE DATE OF SUCH ALTERATION, AND A SPECIFIC DESCRIPTION OF THE ALTERATION.

No.	DATE	SUBMITTAL / REVISION DESCRIPTION	DB	APP
A	07/08/2021	EM&CP REGULATORY SUBMISSION	JM	JR

CHAMPLAIN HUDSON POWER EXPRESS
SEGMENT 3 (PACKAGE 1C) WHITEHALL TO FORT ANN
STA. 15285+00 TO STA. 15300+00 PLAN AND PROFILE

KIEWIT PROJECT NO. 21162
CHA PROJECT NO. 066076
DRAWING NO. C-120

DRAWN BY: JTM | DESIGNED BY: JTM | APPROVED BY: JPR | SCALE AS NOTED | REV. NO. X | DATE 07/08/2022 | SH.NO. XXX OF XXX

File: V:\PROJECTS\ANY\K6\066076.000\09_DESIGN\DRAWINGS\01_SHEETS\DESIGN PACKAGE 1\DESIGN PACKAGE 1C\066076_P1C - C-116 - C-120.DWG Saved: 7/7/2022 9:54:20 PM Plotted: 7/8/2022 8:52:32 AM Current User: Evans, Josh LastSavedBy: 4894

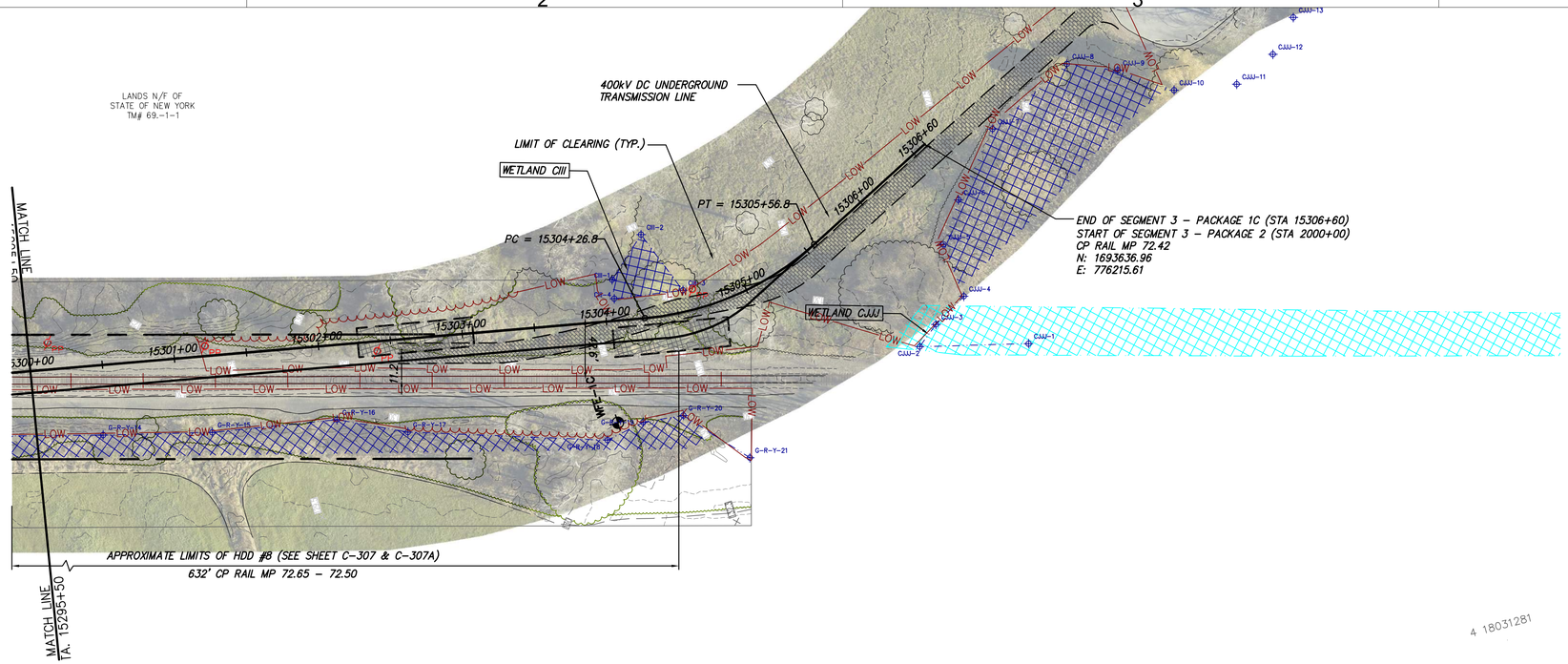

4 18031281

STA. 15300+00 TO STA. 15306+50 PLAN VIEW

SCALE: 1" = 50'

0 50 100
Scale in feet

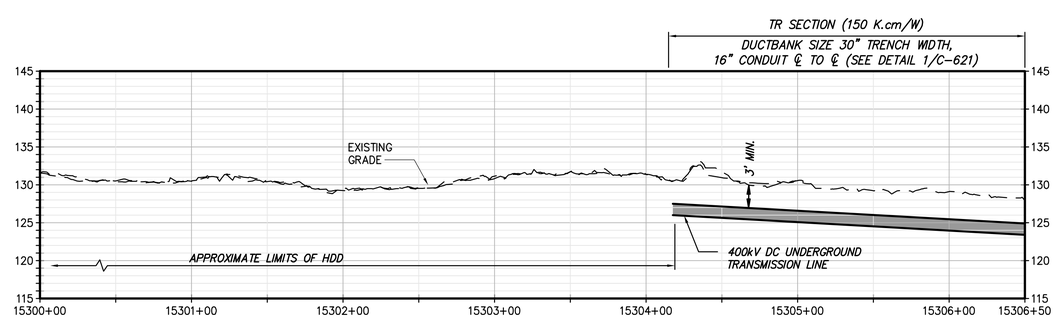

STA. 15300+00 TO STA. 15306+50 PROFILE VIEW

SCALE: H:1" = 50' V:1" = 10'

CHPE Champlain Hudson Power Express

Kiewit

CHA
III Winners Circle, PO Box 5269
Albany, NY 12205-0269
518.453.4500 . www.chacompanies.com

IT IS A VIOLATION OF LAW FOR ANY PERSON, UNLESS THEY ARE ACTING UNDER THE DIRECTION OF A LICENSED PROFESSIONAL ENGINEER, ARCHITECT, LANDSCAPE ARCHITECT OR LAND SURVEYOR TO ALTER AN ITEM IN ANY WAY. IF AN ITEM BEARING THE STAMP OF A LICENSED PROFESSIONAL IS ALTERED, THE ALTERING ENGINEER, ARCHITECT, LANDSCAPE ARCHITECT OR LAND SURVEYOR SHALL STAMP THE DOCUMENT AND INCLUDE THE NOTATION "ALTERED BY" FOLLOWED BY THEIR SIGNATURE, THE DATE OF SUCH ALTERATION, AND A SPECIFIC DESCRIPTION OF THE ALTERATION.

No.	DATE	SUBMITTAL / REVISION DESCRIPTION	DB	APP
A	07/08/2021	EM&CP REGULATORY SUBMISSION	JM	JR

CHAMPLAIN HUDSON POWER EXPRESS
SEGMENT 3 (PACKAGE 1C) WHITEHALL TO FORT ANN
STA. 15300+00 TO STA. 15306+50 PLAN AND PROFILE

KIEWIT PROJECT NO. 21162
CHA PROJECT NO. 066076
DRAWING NO. C-121

DRAWN BY: JTM | DESIGNED BY: JTM | APPROVED BY: JPR | SCALE AS NOTED | REV. NO. X | DATE 07/08/2022 | SH.NO. XXX OF XXX

File: V:\PROJECTS\ANY\K6\066076.000\09_DESIGN\DRAWINGS\01_SHEETS\DESIGN PACKAGE 1\DESIGN PACKAGE 1C\066076_P1C - C-116 - C-120.DWG Saved: 7/7/2022 9:54:20 PM Plotted: 7/8/2022 8:53:31 AM Current User: Evans, Josh LastSavedBy: 4894

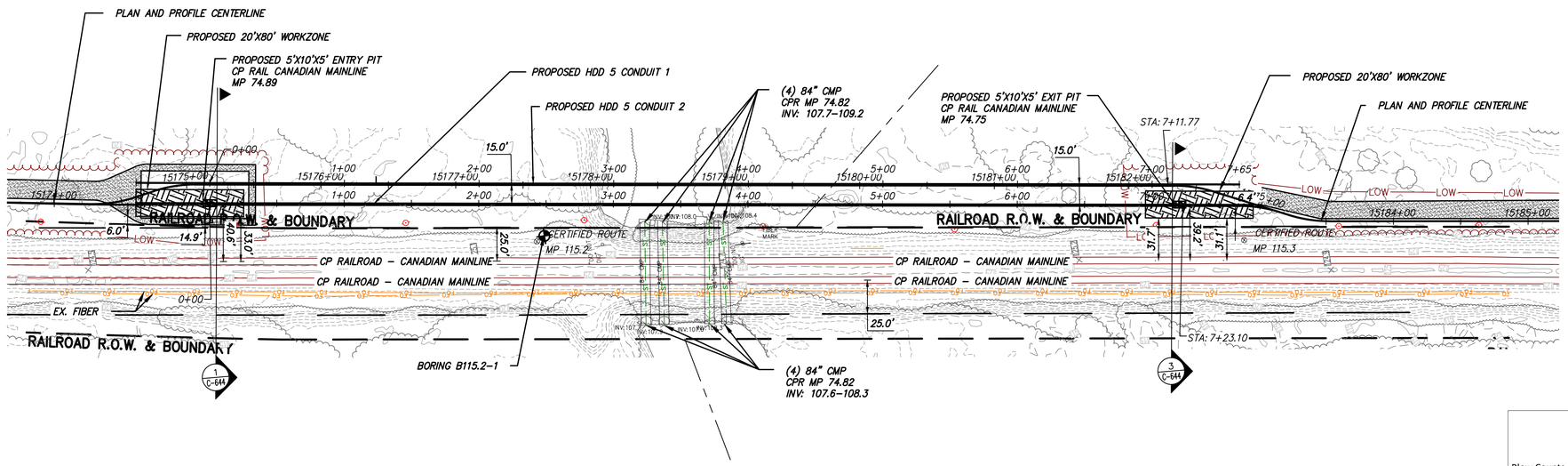

PROPOSED HDD 5 PLAN VIEW

CONDUIT 1

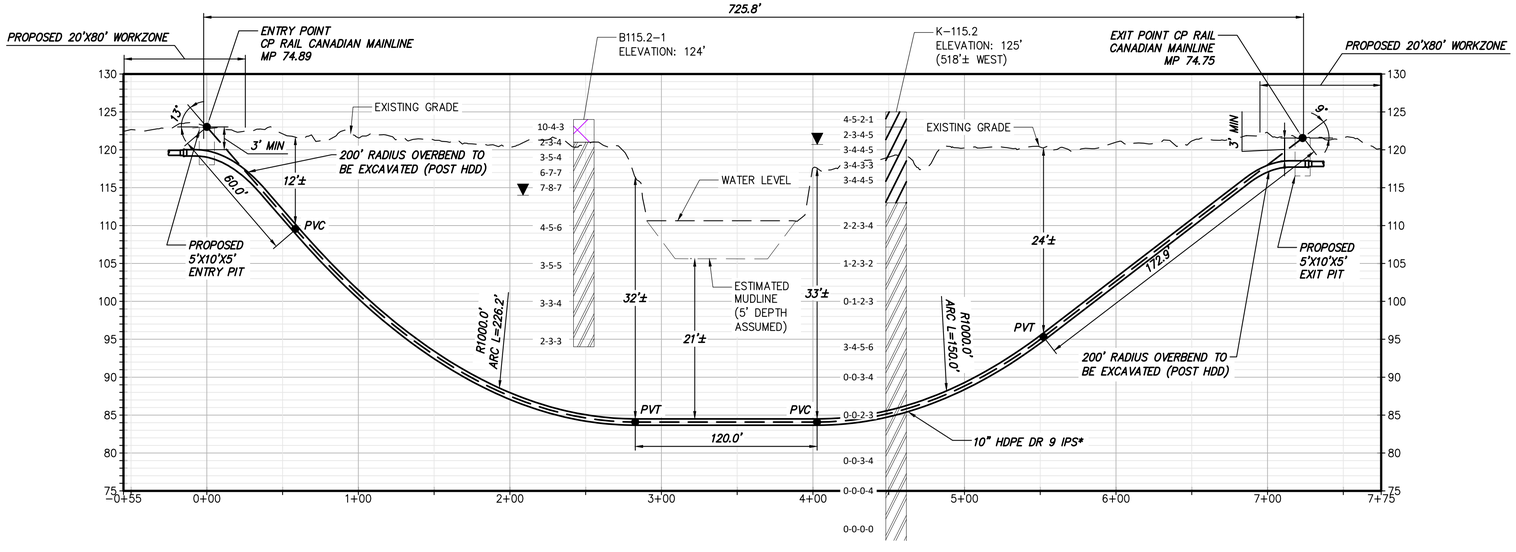

PROPOSED HDD 5 PROFILE

CONDUIT 1

BORING LOG STRIP LEGEND

B101

Blow Counts per 6" =10-10-10

Recovery %/RQD % =95%/90%

11000 =UCS

Legend	
ASPHALT	Asphalt
CH	Fat CLAY
CL	Lean CLAY
CL-ML	SILTY CLAY
CONCRETE	Concrete
Fill	Fill
GC	CLAYEY GRAVEL
GM	SILTY GRAVEL
Gneiss	Undefined
GP	Poorly Graded GRAVEL
GW	Well Graded GRAVEL
ML	SILT
OL	ORGANIC Lean CLAY
OL/OH	ORGANIC SOIL
Rock	Undefined
Sandstone	Sandstone
SC	CLAYEY SAND
SC-SM	SILT, CLAYEY SAND
SHALE	Shale
SM	SILTY SAND
SP	Poorly Graded SAND
SP-SM	Poorly Graded SAND with SILT
SW	Well graded SAND
Topsoil	Topsoil
USGS 708	Gneiss
USGS 718	Granite 1
USGS 732	Quartz

CHPE Champlain Hudson Power Express

Kiewit

CHA
III Winners Circle, PO Box 5269
Albany, NY 12205-0269
518.453.4500 . www.chacompanies.com

IT IS A VIOLATION OF LAW FOR ANY PERSON, UNLESS THEY ARE ACTING UNDER THE DIRECTION OF A LICENSED PROFESSIONAL ENGINEER, ARCHITECT, LANDSCAPE ARCHITECT OR LAND SURVEYOR TO ALTER AN ITEM IN ANY WAY. IF AN ITEM BEARING THE STAMP OF A LICENSED PROFESSIONAL IS ALTERED, THE ALTERING ENGINEER, ARCHITECT, LANDSCAPE ARCHITECT OR LAND SURVEYOR SHALL STAMP THE DOCUMENT AND INCLUDE THE NOTATION "ALTERED BY" FOLLOWED BY THEIR SIGNATURE, THE DATE OF SUCH ALTERATION, AND A SPECIFIC DESCRIPTION OF THE ALTERATION.

No.	DATE	SUBMITTAL / REVISION DESCRIPTION	DB	APP
A	07/08/2021	EM&CP REGULATORY SUBMISSION	JM	JR

CHAMPLAIN HUDSON POWER EXPRESS
SEGMENT 3 (PACKAGE 1C) WHITEHALL TO FORT ANN
PROPOSED PLAN AND PROFILE - HDD 5

WHITEHALL, WASHINGTON COUNTY, NY

KIEWIT PROJECT NO. 21162
CHA PROJECT NO. 066076
DRAWING NO. C-304

DRAWN BY: CJL DESIGNED BY: CJL APPROVED BY: JEO SCALE AS NOTED DATE 07/08/2022 REV. NO. X SH.NO. XXX OF XXX

BULVERT CROSSING. CONDUIT 1

File: V:\PROJECTS\ANY\K6\066076.000\09_DESIGN\DRAWINGS\01_SHEETS\DESIGN PACKAGE 1\DESIGN PACKAGE 1C\066076_P1C_C-304 - C-3044.DWG Saved: 7/8/2022 7:37:21 AM Plotted: 7/8/2022 7:43:42 AM Current User: Snyder, Morgan LastSavedBy: 6043

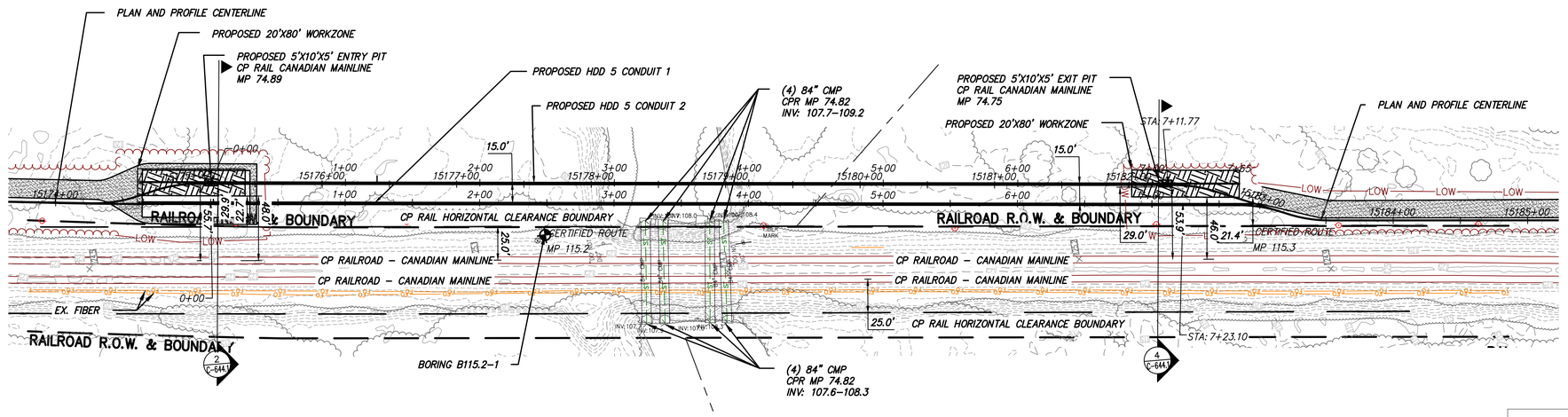

PROPOSED HDD 5 PLAN VIEW

CONDUIT 2

0 50 100
Scale in feet

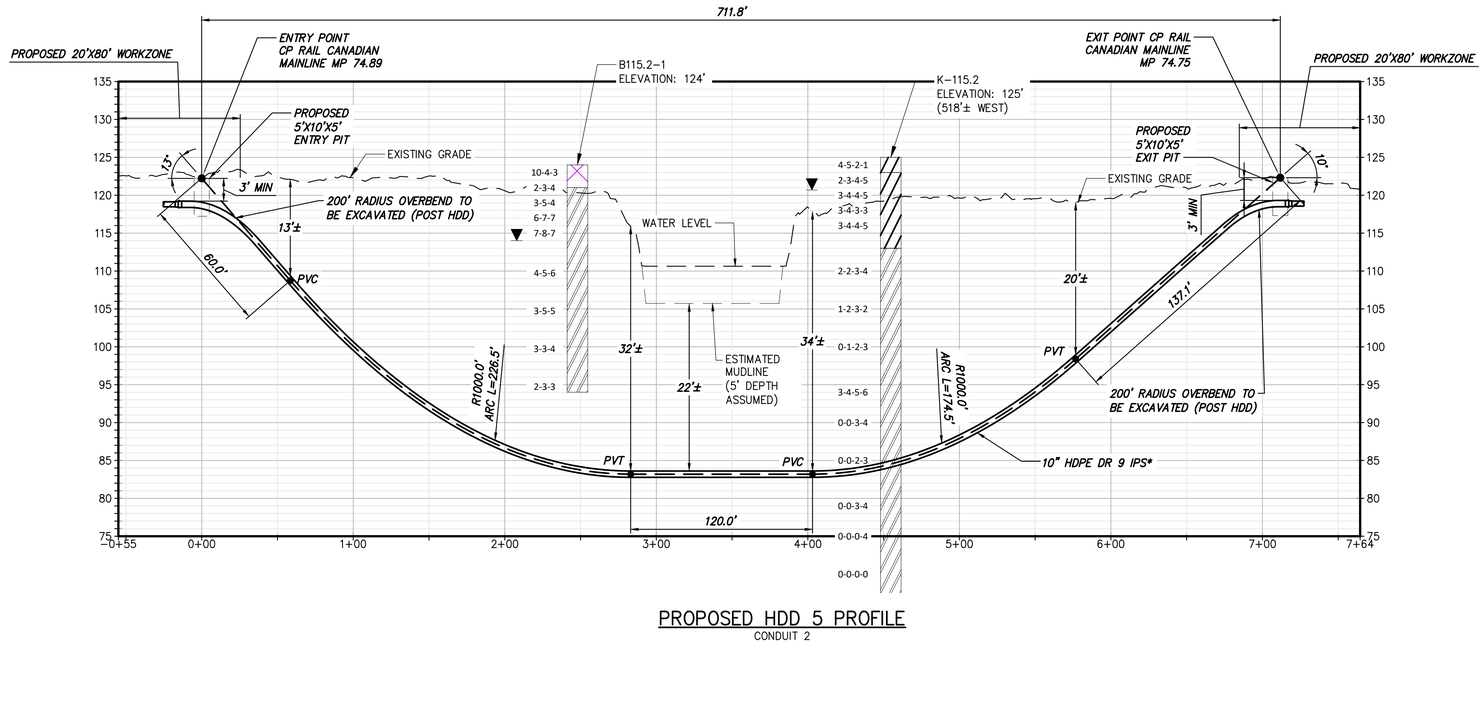

PROPOSED HDD 5 PROFILE

CONDUIT 2

20
10
0
0 50 100
Scale in feet

BORING LOG STRIP LEGEND

B101

Blow Counts per 6" =10-10-10

Recovery %/RQD % =95%/90%

11000 =UCS

Legend	
ASPHALT	Asphalt
CH	Fat CLAY
CL	Lean CLAY
CL-ML	SILTY CLAY
CONCRETE	Concrete
Fill	Fill
GC	CLAYEY GRAVEL
GM	SILTY GRAVEL
Gneiss	Undefined
GP	Poorly Graded GRAVEL
GW	Well Graded GRAVEL
ML	SILT
OL	ORGANIC Lean CLAY
OL/OH	ORGANIC SOIL
Rock	Undefined
Sandstone	Sandstone
SC	CLAYEY SAND
SC-SM	SILT, CLAYEY SAND
SHALE	Shale
SM	SILTY SAND
SP	Poorly Graded SAND
SP-SM	Poorly Graded SAND with SILT
SW	Well graded SAND
Topsoil	Topsoil
USGS 708	Gneiss
USGS 718	Granite 1
USGS 732	Quartz

CHPE Champlain Hudson Power Express

Kiewit

CHA
III Winners Circle, PO Box 5269
Albany, NY 12205-0269
518.453.4500 . www.chacompanies.com

IT IS A VIOLATION OF LAW FOR ANY PERSON, UNLESS THEY ARE ACTING UNDER THE DIRECTION OF A LICENSED PROFESSIONAL ENGINEER, ARCHITECT, LANDSCAPE ARCHITECT OR LAND SURVEYOR TO ALTER AN ITEM IN ANY WAY. IF AN ITEM BEARING THE STAMP OF A LICENSED PROFESSIONAL IS ALTERED, THE ALTERING ENGINEER, ARCHITECT, LANDSCAPE ARCHITECT OR LAND SURVEYOR SHALL STAMP THE DOCUMENT AND INCLUDE THE NOTATION "ALTERED BY" FOLLOWED BY THEIR SIGNATURE, THE DATE OF SUCH ALTERATION, AND A SPECIFIC DESCRIPTION OF THE ALTERATION.

No.	DATE	SUBMITTAL / REVISION DESCRIPTION	DB	APP
A	07/08/2021	EM&CP REGULATORY SUBMISSION	JM	JR

CHAMPLAIN HUDSON POWER EXPRESS

SEGMENT 3 (PACKAGE 1C) WHITEHALL TO FORT ANN

PROPOSED PLAN AND PROFILE - HDD 5

WHITEHALL, WASHINGTON COUNTY, NY

KIEWIT PROJECT NO. 21162
CHA PROJECT NO. 066076
DRAWING NO. **C-304A**

DRAWN BY: CJL | DESIGNED BY: CJL | APPROVED BY: JEO | SCALE AS NOTED | REV. NO. X | DATE 07/08/2022 | SH.NO. XXX OF XXX

File: V:\PROJECTS\ANY\K6\066076.000\09_DESIGN\DRAWINGS\01_SHEETS\DESIGN PACKAGE 1\DESIGN PACKAGE 1C\066076_P1C_C-304 - C-304A.DWG Saved: 7/7/2022 2:22:56 PM Plotted: 7/7/2022 7:00:43 PM Current User: Snyder, Morgan LastSavedBy: 6043

BOVERT CROSSING CONDUIT 2

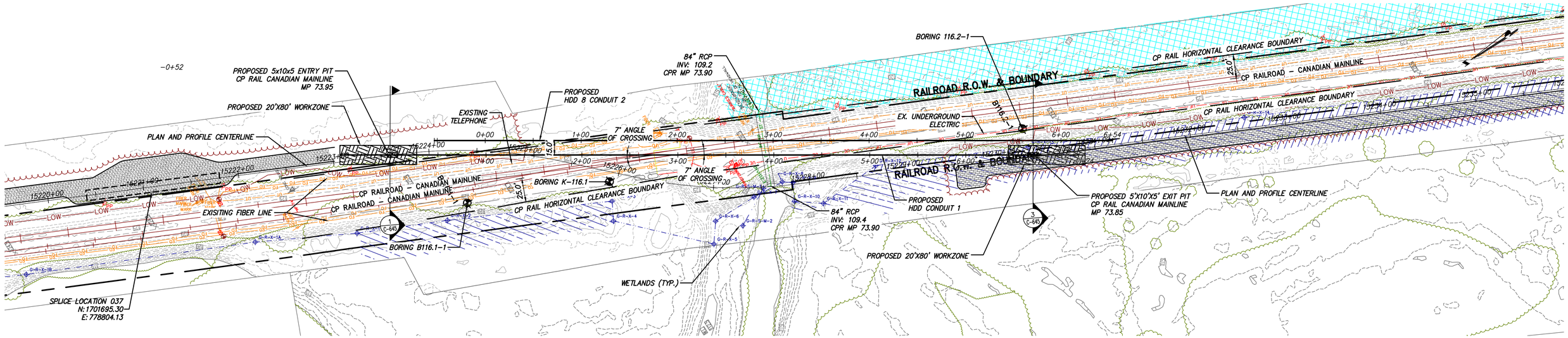

0 50 100
Scale in feet

NOTE: DESIGN UNDER FURTHER EVALUATION

PROPOSED HDD 6 PLAN VIEW

CONDUIT 1

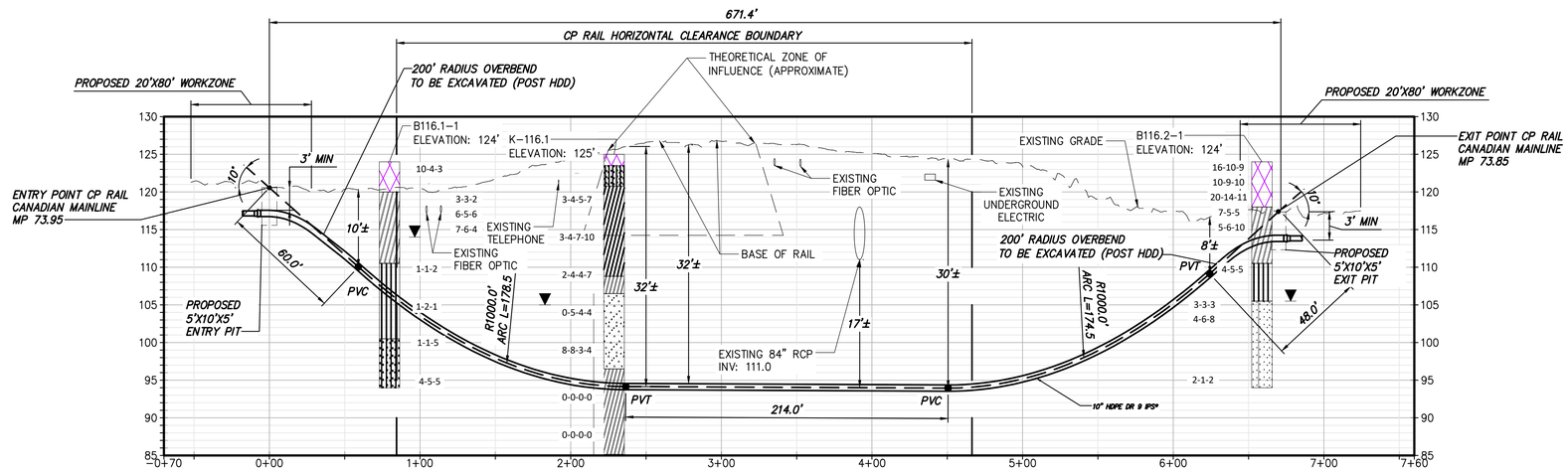

0 50 100
Scale in feet

NOTE: DESIGN UNDER FURTHER EVALUATION

PROPOSED HDD 6 PROFILE

CONDUIT 1

*HDD 6 CONSIST OF (2) HVDC ELECTRICAL TRANSMISSION CABLES HOUSED IN INDIVIDUAL 10" DIAMETER CASINGS.

A THIRD 2" CASING WILL BE BUNDLED WITH ONE OF THE 10" CASINGS FOR A TELECOMMUNICATIONS LINE.

BORING LOG STRIP LEGEND

B101
10-10-10
Recovery %/RQD % =95%/90%
11000 =UCS

Legend

	ASPHALT	Asphalt
	CH	Fat CLAY
	CL	Lean CLAY
	CL-ML	SILTY CLAY
	CONCRETE	Concrete
	Fill	Fill
	GC	CLAYEY GRAVEL
	GM	SILTY GRAVEL
	Gneiss	Undefined
	GP	Poorly Graded GRAVEL
	GW	Well Graded GRAVEL
	ML	SILT
	OL	ORGANIC Lean CLAY
	OL/OH	ORGANIC SOIL
	Rock	Undefined
	Sandstone	Sandstone
	SC	CLAYEY SAND
	SC-SM	SILT, CLAYEY SAND
	SHALE	Shale
	SM	SILTY SAND
	SP	Poorly Graded SAND
	SP-SM	Poorly Graded SAND with SILT
	SW	Well graded SAND
	Topsoil	Topsoil
	USGS 708	Gneiss
	USGS 718	Granite 1
	USGS 732	Quartz

CHPE Champlain Hudson Power Express

Kiewit

CHA
III Winners Circle, PO Box 5269
Albany, NY 12205-0269
518.453.4500 . www.chacompanies.com

IT IS A VIOLATION OF LAW FOR ANY PERSON, UNLESS THEY ARE ACTING UNDER THE DIRECTION OF A LICENSED PROFESSIONAL ENGINEER, ARCHITECT, LANDSCAPE ARCHITECT OR LAND SURVEYOR TO ALTER AN ITEM IN ANY WAY. IF AN ITEM BEARING THE STAMP OF A LICENSED PROFESSIONAL IS ALTERED, THE ALTERING ENGINEER, ARCHITECT, LANDSCAPE ARCHITECT OR LAND SURVEYOR SHALL STAMP THE DOCUMENT AND INCLUDE THE NOTATION "ALTERED BY" FOLLOWED BY THEIR SIGNATURE, THE DATE OF SUCH ALTERATION, AND A SPECIFIC DESCRIPTION OF THE ALTERATION.

No.	DATE	SUBMITTAL / REVISION DESCRIPTION	DB	APP
A	07/08/2021	EM&CP REGULATORY SUBMISSION	JM	JR

CHAMPLAIN HUDSON POWER EXPRESS
SEGMENT 3 (PACKAGE 1C) WHITEHALL TO FORT ANN
PROPOSED PLAN AND PROFILE - HDD 6
CP RAILROAD CROSSING, CONDUIT 1
WHITEHALL, WASHINGTON COUNTY, NY

KIEWIT PROJECT NO. 21162
CHA PROJECT NO. 066076
DRAWING NO. C-305

DRAWN BY: SK | DESIGNED BY: SK | APPROVED BY: JEO | SCALE AS NOTED | REV. NO. X | DATE 07/08/2022 | SH.NO. XXX OF XXX

File: V:\PROJECTS\ANY\K6\066076.000\09_DESIGN\DRAWINGS\01_SHEETS\DESIGN PACKAGE 1\DESIGN PACKAGE 1C\066076_PIC_C-305 - C-305A.DWG Saved: 7/7/2022 2:14:30 PM Plotted: 7/8/2022 8:51:19 AM Current User: Snyder, Morgan LastSavedBy: 6043

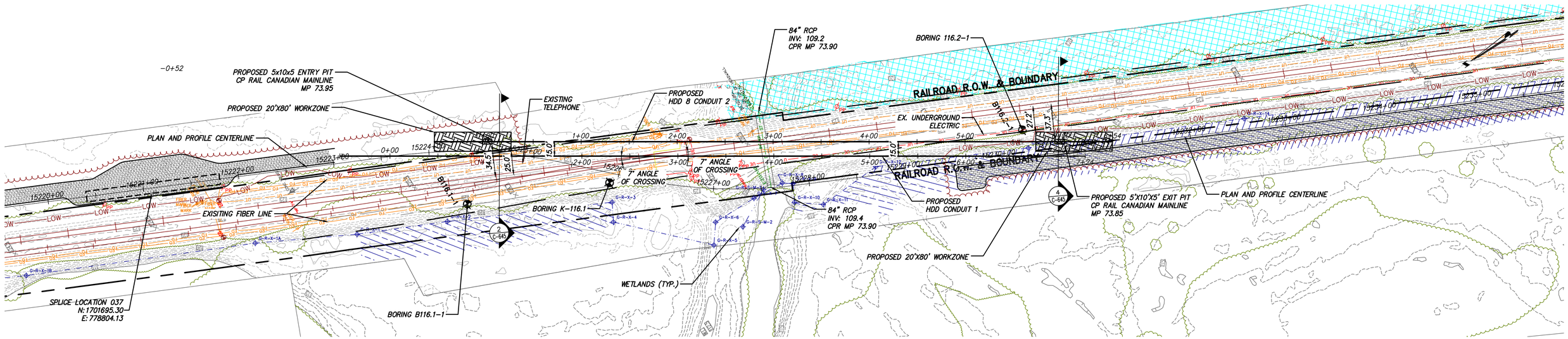

0 50 100
Scale in feet

NOTE: DESIGN UNDER FURTHER EVALUATION

PROPOSED HDD 6 PLAN VIEW
CONDUIT 2

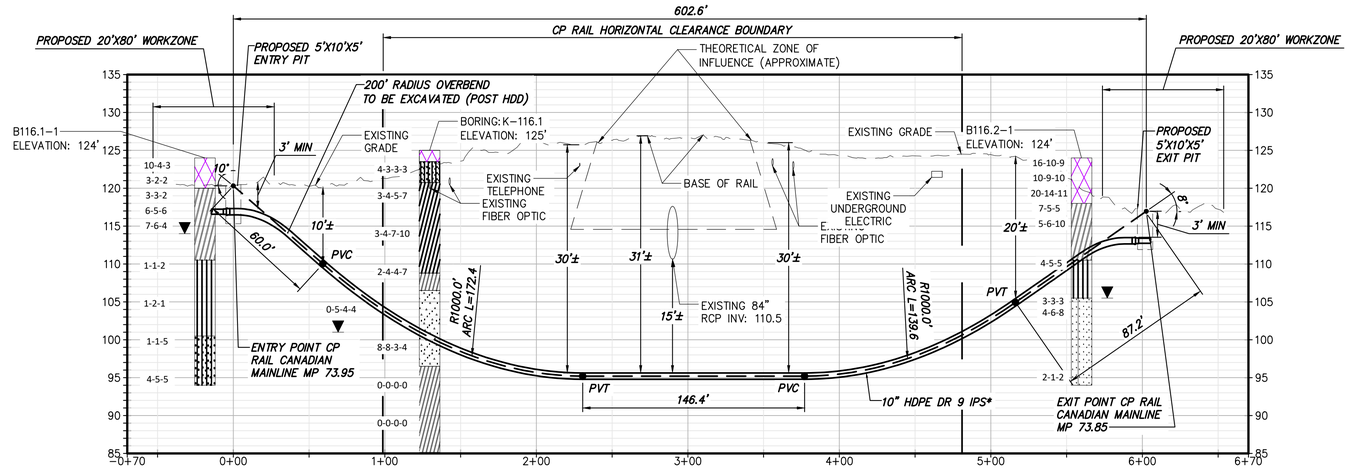

NOTE: DESIGN UNDER FURTHER EVALUATION

PROPOSED HDD 6 PROFILE
CONDUIT 2

0 50 100
Scale in feet

*HDD 6 CONSIST OF (2) HVDC ELECTRICAL TRANSMISSION CABLES HOUSED IN INDIVIDUAL 10" DIAMETER CASINGS.

A THIRD 2" CASING WILL BE BUNDLED WITH ONE OF THE 10" CASINGS FOR A TELECOMMUNICATIONS LINE.

BORING LOG STRIP LEGEND

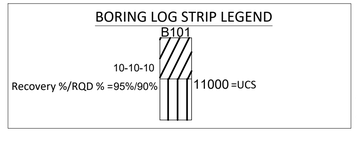

Legend		
	ASPHALT	Asphalt
	CH	Fat CLAY
	CL	Lean CLAY
	CL-ML	SILTY CLAY
	CONCRETE	Concrete
	Fill	Fill
	GC	CLAYEY GRAVEL
	GM	SILTY GRAVEL
	Gneiss	Undefined
	GP	Poorly Graded GRAVEL
	GW	Well Graded GRAVEL
	ML	SILT
	OL	ORGANIC Lean CLAY
	OL/OH	ORGANIC SOIL
	Rock	Undefined
	Sandstone	Sandstone
	SC	CLAYEY SAND
	SC-SM	SILT, CLAYEY SAND
	SHALE	Shale
	SM	SILTY SAND
	SP	Poorly Graded SAND
	SP-SM	Poorly Graded SAND with SILT
	SW	Well graded SAND
	Topsoil	Topsoil
	USGS 708	Gneiss
	USGS 718	Granite 1
	USGS 732	Quartz

CHPE Champlain Hudson Power Express

Kiewit

CHA
III Winners Circle, PO Box 5269
Albany, NY 12205-0269
518.453.4500 . www.chacompanies.com

IT IS A VIOLATION OF LAW FOR ANY PERSON, UNLESS THEY ARE ACTING UNDER THE DIRECTION OF A LICENSED PROFESSIONAL ENGINEER, ARCHITECT, LANDSCAPE ARCHITECT OR LAND SURVEYOR TO ALTER AN ITEM IN ANY WAY. IF AN ITEM BEARING THE STAMP OF A LICENSED PROFESSIONAL IS ALTERED, THE ALTERING ENGINEER, ARCHITECT, LANDSCAPE ARCHITECT OR LAND SURVEYOR SHALL STAMP THE DOCUMENT AND INCLUDE THE NOTATION "ALTERED BY" FOLLOWED BY THEIR SIGNATURE, THE DATE OF SUCH ALTERATION, AND A SPECIFIC DESCRIPTION OF THE ALTERATION.

No.	DATE	SUBMITTAL / REVISION DESCRIPTION	DB	APP
A	07/08/2021	EM&CP REGULATORY SUBMISSION	JM	JR

CHAMPLAIN HUDSON POWER EXPRESS
SEGMENT 3 (PACKAGE 1C) WHITEHALL TO FORT ANN
PROPOSED PLAN AND PROFILE - HDD 6
CP RAILROAD CROSSING, CONDUIT 2
WHITEHALL, WASHINGTON COUNTY, NY

KIEWIT PROJECT NO. 21162
CHA PROJECT NO. 066076
DRAWING NO. C-305A

DRAWN BY: SK | DESIGNED BY: SK | APPROVED BY: JEO | SCALE AS NOTED | REV. NO. X | DATE 07/08/2022 | SH.NO. XXX OF XXX

File: V:\PROJECTS\ANY\K6\066076.000\09_DESIGN\DRAWINGS\01_SHEETS\DESIGN PACKAGE 1\DESIGN PACKAGE 1C\066076_P1C_C-305 - C-305A.DWG Saved: 7/7/2022 2:14:30 PM Plotted: 7/8/2022 8:54:11 AM Current User: Snyder, Morgan LastSavedBy: 6043

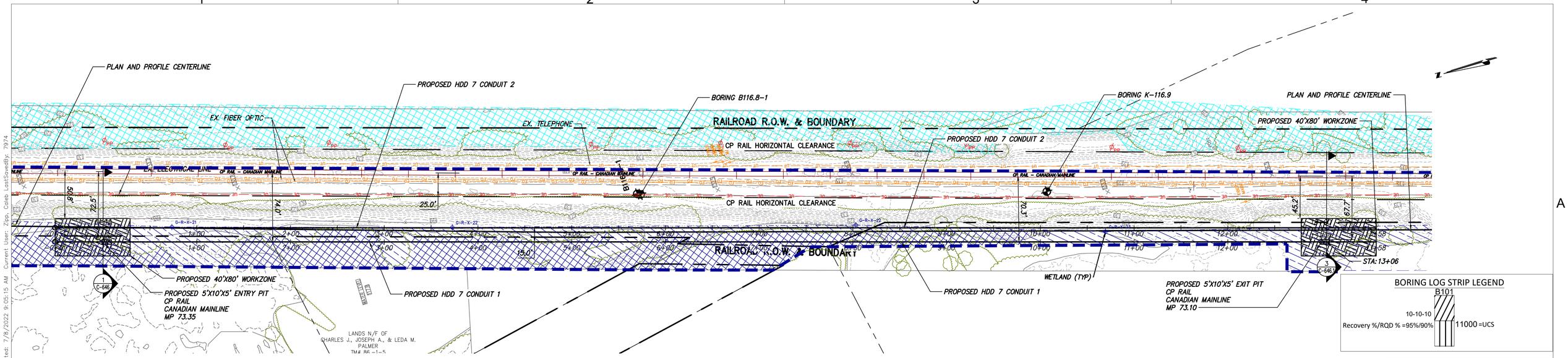

PROPOSED HDD 7 PLAN

1304.7' CONDUIT 1

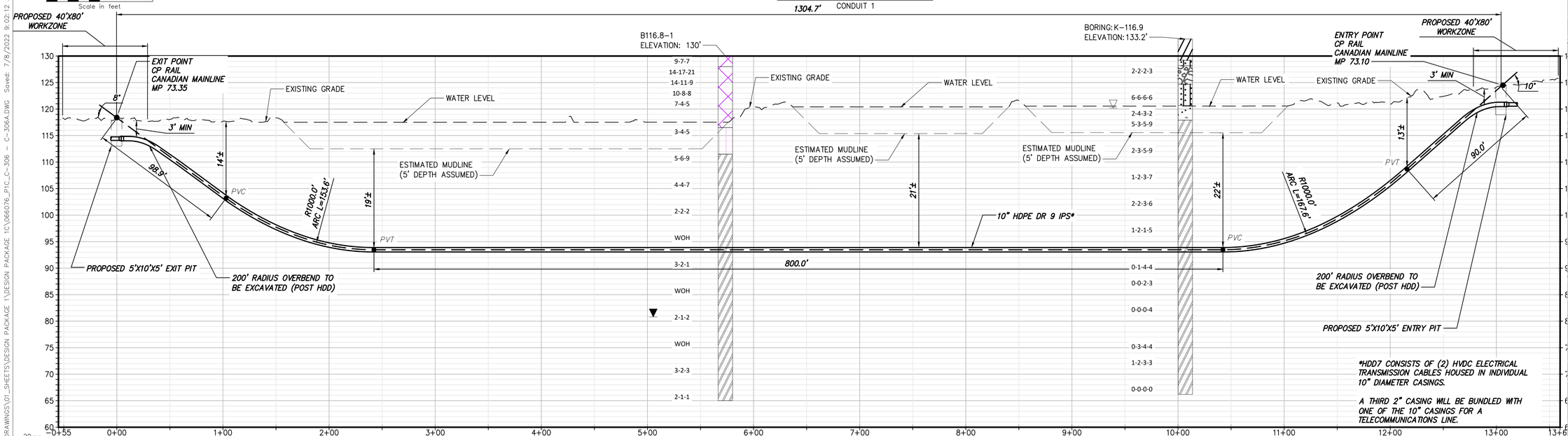

PROPOSED HDD 7 PROFILE

CONDUIT 1

BORING LOG STRIP LEGEND

B101

10-10-10

Recovery %/RQD % =95%/90%

11000 =UCS

Legend		
	ASPHALT	Asphalt
	CH	Fat CLAY
	CL	Lean CLAY
	CL-ML	SILTY CLAY
	CONCRETE	Concrete
	Fill	Fill
	GC	CLAYEY GRAVEL
	GM	SILTY GRAVEL
	Gneiss	Undefined
	GP	Poorly Graded GRAVEL
	GW	Well Graded GRAVEL
	ML	SILT
	OL	ORGANIC Lean CLAY
	OL/OH	ORGANIC SOIL
	Rock	Undefined
	Sandstone	Sandstone
	SC	CLAYEY SAND
	SC-SM	SILT, CLAYEY SAND
	SHALE	Shale
	SM	SILTY SAND
	SP	Poorly Graded SAND
	SP-SM	Poorly Graded SAND with SILT
	SW	Well graded SAND
	Topsoil	Topsoil
	USGS 708	Gneiss
	USGS 718	Granite 1
	USGS 732	Quartz

CHPE Champlain Hudson Power Express

Kiewit

CHA
III Winners Circle, PO Box 5269
Albany, NY 12205-0269
518.453.4500 . www.chacompanies.com

IT IS A VIOLATION OF LAW FOR ANY PERSON, UNLESS THEY ARE ACTING UNDER THE DIRECTION OF A LICENSED PROFESSIONAL ENGINEER, ARCHITECT, LANDSCAPE ARCHITECT OR LAND SURVEYOR TO ALTER AN ITEM IN ANY WAY. IF AN ITEM BEARING THE STAMP OF A LICENSED PROFESSIONAL IS ALTERED, THE ALTERING ENGINEER, ARCHITECT, LANDSCAPE ARCHITECT OR LAND SURVEYOR SHALL STAMP THE DOCUMENT AND INCLUDE THE NOTATION "ALTERED BY" FOLLOWED BY THEIR SIGNATURE, THE DATE OF SUCH ALTERATION, AND A SPECIFIC DESCRIPTION OF THE ALTERATION.

No.	DATE	SUBMITTAL / REVISION DESCRIPTION	DB	APP
A	07/08/2021	EM&CP REGULATORY SUBMISSION	JM	JR

CHAMPLAIN HUDSON POWER EXPRESS
SEGMENT 3 (PACKAGE 1C) WHITEHALL TO FORT ANN
PROPOSED PLAN AND PROFILE - HDD 7
WETLAND & OPEN WATER CROSSING, CONDUIT 1
WHITEHALL, WASHINGTON COUNTY, NY

KIEWIT PROJECT NO. 21162
CHA PROJECT NO. 066076
DRAWING NO. **C-306**

DRAWN BY: MCS | DESIGNED BY: MCS | APPROVED BY: JEO | SCALE AS NOTED | DATE 07/08/2022 | REV. NO. X | SH.NO. XXX OF XXX

File: \\CHA-LLP.COM\PROJ\PROJECTS\ANY\K6\066076.000\09_DESIGN\DRAWINGS\01_SHEETS\DESIGN PACKAGE 1\DESIGN PACKAGE 1C\066076_P1C_C-306 - C-306A.DWG Saved: 7/8/2022 9:02:12 AM Plotted: 7/8/2022 9:05:15 AM Current User: Zipp, Caleb LastSavedBy: 7974

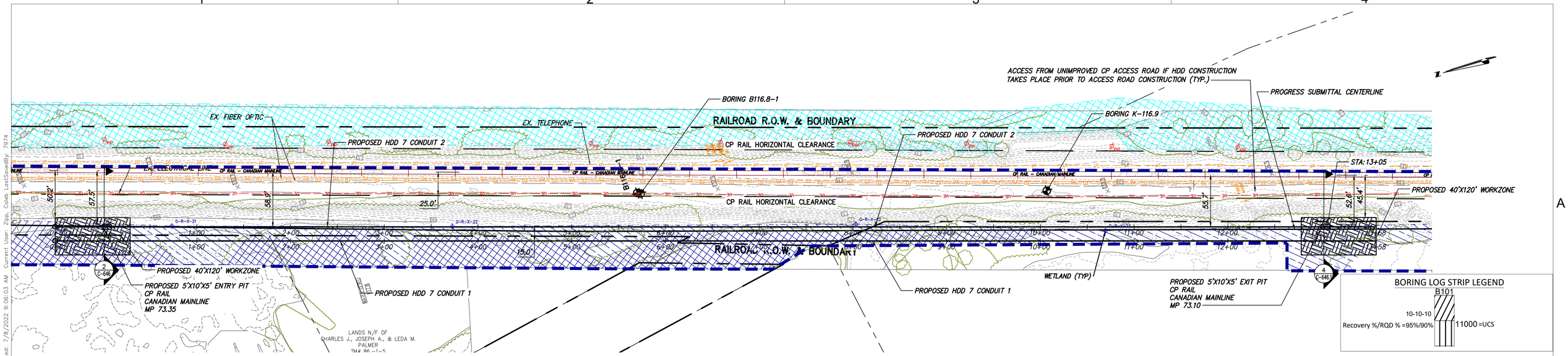

PROPOSED HDD 7 PLAN

CONDUIT 2

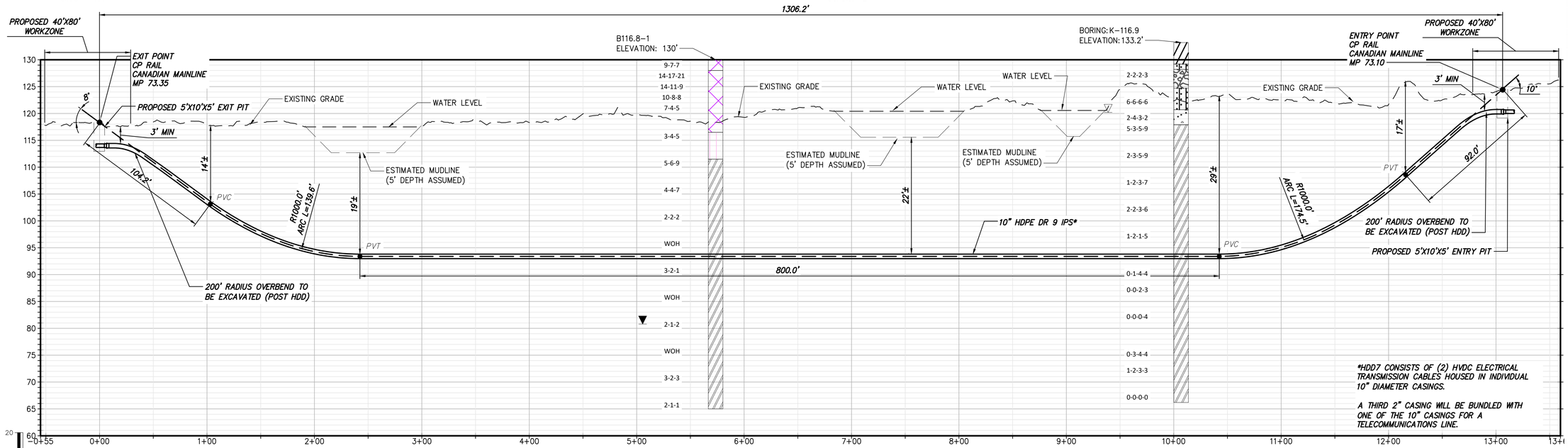

PROPOSED HDD 7 PROFILE

CONDUIT 2

BORING LOG STRIP LEGEND

B101

10-10-10

Recovery %/RQD % =95%/90%

11000 =UCS

Legend	
ASPHALT	Asphalt
CH	Fat CLAY
CL	Lean CLAY
CL-ML	SILTY CLAY
CONCRETE	Concrete
Fill	Fill
GC	CLAYEY GRAVEL
GM	SILTY GRAVEL
Gneiss	Undefined
GP	Poorly Graded GRAVEL
GW	Well Graded GRAVEL
ML	SILT
OL	ORGANIC Lean CLAY
OL/OH	ORGANIC SOIL
Rock	Undefined
Sandstone	Sandstone
SC	CLAYEY SAND
SC-SM	SILT, CLAYEY SAND
SHALE	Shale
SM	SILTY SAND
SP	Poorly Graded SAND
SP-SM	Poorly Graded SAND with SILT
SW	Well graded SAND
Topsoil	Topsoil
USGS 708	Gneiss
USGS 718	Granite 1
USGS 732	Quartz

CHPE Champlain Hudson Power Express

Kiewit

CHA
III Winners Circle, PO Box 5269
Albany, NY 12205-0269
518.453.4500 . www.chacompanies.com

IT IS A VIOLATION OF LAW FOR ANY PERSON, UNLESS THEY ARE ACTING UNDER THE DIRECTION OF A LICENSED PROFESSIONAL ENGINEER, ARCHITECT, LANDSCAPE ARCHITECT OR LAND SURVEYOR TO ALTER AN ITEM IN ANY WAY. IF AN ITEM BEARING THE STAMP OF A LICENSED PROFESSIONAL IS ALTERED, THE ALTERING ENGINEER, ARCHITECT, LANDSCAPE ARCHITECT OR LAND SURVEYOR SHALL STAMP THE DOCUMENT AND INCLUDE THE NOTATION "ALTERED BY" FOLLOWED BY THEIR SIGNATURE, THE DATE OF SUCH ALTERATION, AND A SPECIFIC DESCRIPTION OF THE ALTERATION.

No.	DATE	SUBMITTAL / REVISION DESCRIPTION	DB	APP
A	07/08/2021	EM&CP REGULATORY SUBMISSION	JM	JR

CHAMPLAIN HUDSON POWER EXPRESS
SEGMENT 3 (PACKAGE 1C) WHITEHALL TO FORT ANN
PROPOSED PLAN AND PROFILE - HDD 7
WETLAND & OPEN WATER CROSSING, CONDUIT 2
WHITEFALL, WASHINGTON COUNTY, NY

KIEWIT PROJECT NO. 21162
CHA PROJECT NO. 066076
DRAWING NO. **C-306A**

DRAWN BY: MCS | DESIGNED BY: MCS | APPROVED BY: JEO | SCALE AS NOTED | REV. NO. X | DATE 07/08/2022 | SH.NO. XXX OF XXX

File: \\CHA-LLP.COM\PROJ\PROJECTS\ANY\K6\066076.000\09_DESIGN\DRAWINGS\01_SHEETS\DESIGN PACKAGE 1\DESIGN PACKAGE 1C\066076_P1C_C-306 - C-306A.DWG Saved: 7/8/2022 9:02:12 AM Plotted: 7/8/2022 9:06:03 AM Current User: Zipp, Caleb LastSavedBy: 7974

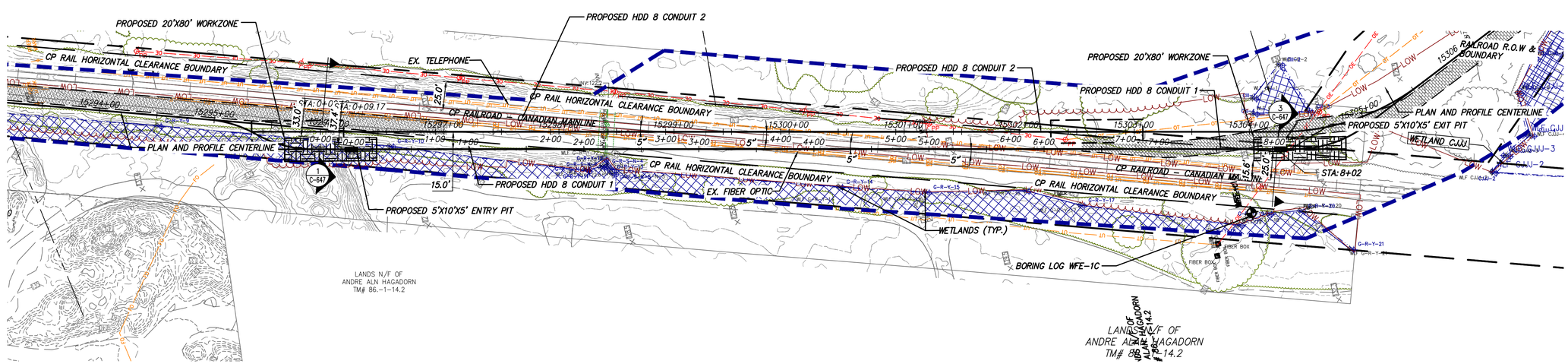

0 50 100
Scale in feet

PROPOSED HDD 8 PLAN VIEW
CONDUIT 1

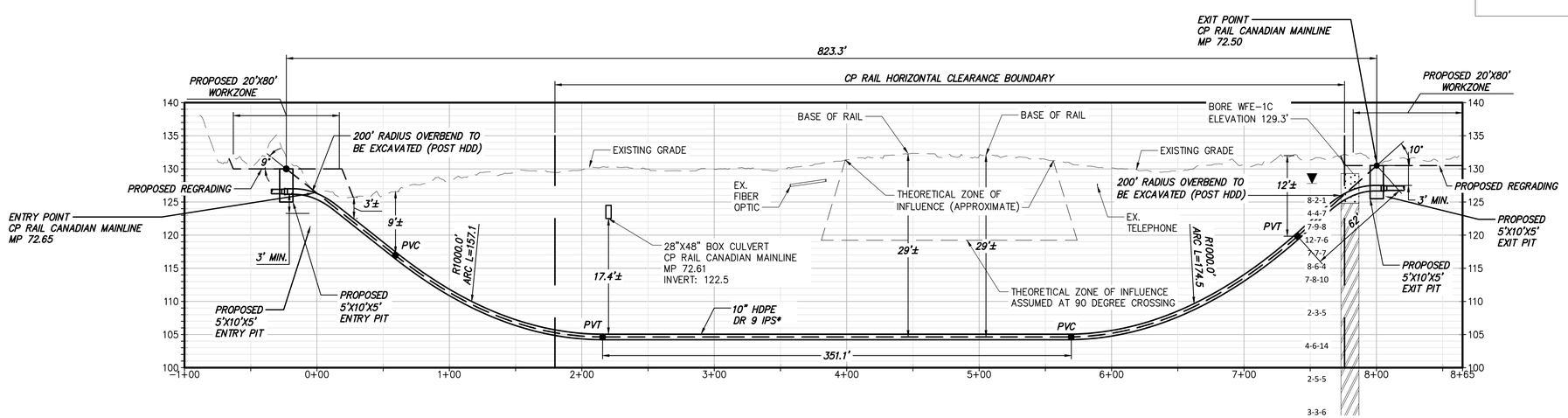

PROPOSED HDD 8 PROFILE
CONDUIT 1

0 50 100
Scale in feet

20
10
0

*HDD 51 CONSIST OF (2) HVDC ELECTRICAL TRANSMISSION CABLES HOUSED IN INDIVIDUAL 10" DIAMETER CASINGS.

A THIRD 2" CASING WILL BE BUNDLED WITH ONE OF THE 10" CASINGS FOR A TELECOMMUNICATIONS LINE.

BORING LOG STRIP LEGEND

B101
10-10-10
Recovery %/RQD % =95%/90%
11000 =UCS

Legend

	ASPHALT	Asphalt
	CH	Fat CLAY
	CL	Lean CLAY
	CL-ML	SILTY CLAY
	CONCRETE	Concrete
	Fill	Fill
	GC	CLAYEY GRAVEL
	GM	SILTY GRAVEL
	Gneiss	Undefined
	GP	Poorly Graded GRAVEL
	GW	Well Graded GRAVEL
	ML	SILT
	OL	ORGANIC Lean CLAY
	OL/OH	ORGANIC SOIL
	Rock	Undefined
	Sandstone	Sandstone
	SC	CLAYEY SAND
	SC-SM	SILT, CLAYEY SAND
	SHALE	Shale
	SM	SILTY SAND
	SP	Poorly Graded SAND
	SP-SM	Poorly Graded SAND with SILT
	SW	Well graded SAND
	Topsoil	Topsoil
	USGS 708	Gneiss
	USGS 718	Granite 1
	USGS 732	Quartz

CHPE Champlain Hudson Power Express

Kiewit

CHA
III Winners Circle, PO Box 5269
Albany, NY 12205-0269
518.453.4500 . www.chacompanies.com

IT IS A VIOLATION OF LAW FOR ANY PERSON, UNLESS THEY ARE ACTING UNDER THE DIRECTION OF A LICENSED PROFESSIONAL ENGINEER, ARCHITECT, LANDSCAPE ARCHITECT OR LAND SURVEYOR TO ALTER AN ITEM IN ANY WAY. IF AN ITEM BEARING THE STAMP OF A LICENSED PROFESSIONAL IS ALTERED, THE ALTERING ENGINEER, ARCHITECT, LANDSCAPE ARCHITECT OR LAND SURVEYOR SHALL STAMP THE DOCUMENT AND INCLUDE THE NOTATION "ALTERED BY" FOLLOWED BY THEIR SIGNATURE, THE DATE OF SUCH ALTERATION, AND A SPECIFIC DESCRIPTION OF THE ALTERATION.

No.	DATE	SUBMITTAL / REVISION DESCRIPTION	DB	APP
A	07/08/2021	EM&CP REGULATORY SUBMISSION	JM	JR

CHAMPLAIN HUDSON POWER EXPRESS
SEGMENT 3 (PACKAGE 1C) WHITEHALL TO FORT ANN
PROPOSED PLAN AND PROFILE - HDD 8
CP RAILROAD CROSSING, CONDUIT 1
WHITEHALL, WASHINGTON COUNTY, NY

KIEWIT PROJECT NO. 21162
CHA PROJECT NO. 066076
DRAWING NO. **C-307**

DRAWN BY: CKZ | DESIGNED BY: CKZ | APPROVED BY: JEO | SCALE AS NOTED | REV. NO. X | DATE 07/08/2022 | SH.NO. XXX OF XXX

File: V:\PROJECTS\ANY\K6\066076.000\09_DESIGN\DRAWINGS\01_SHEETS\DESIGN PACKAGE 1\DESIGN PACKAGE 1C\066076_1C_C_307.DWG Saved: 7/8/2022 9:50:43 AM Plotted: 7/8/2022 9:53:25 AM Current User: Snyder, Morgan LastSavedBy: 7787

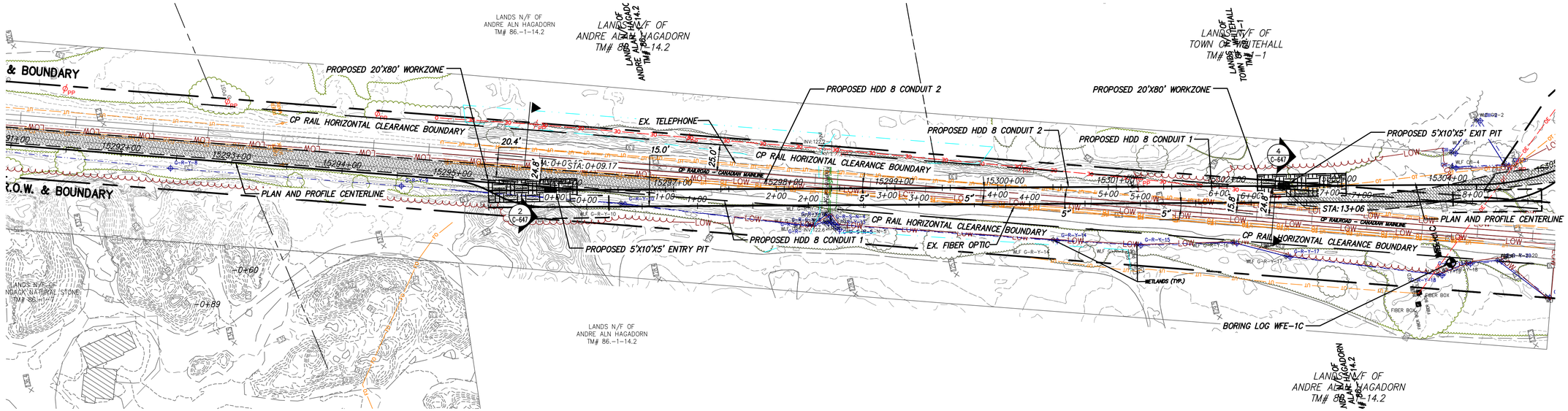

PROPOSED HDD 8 PLAN VIEW

CONDUIT 2

Scale in feet: 0 50 100

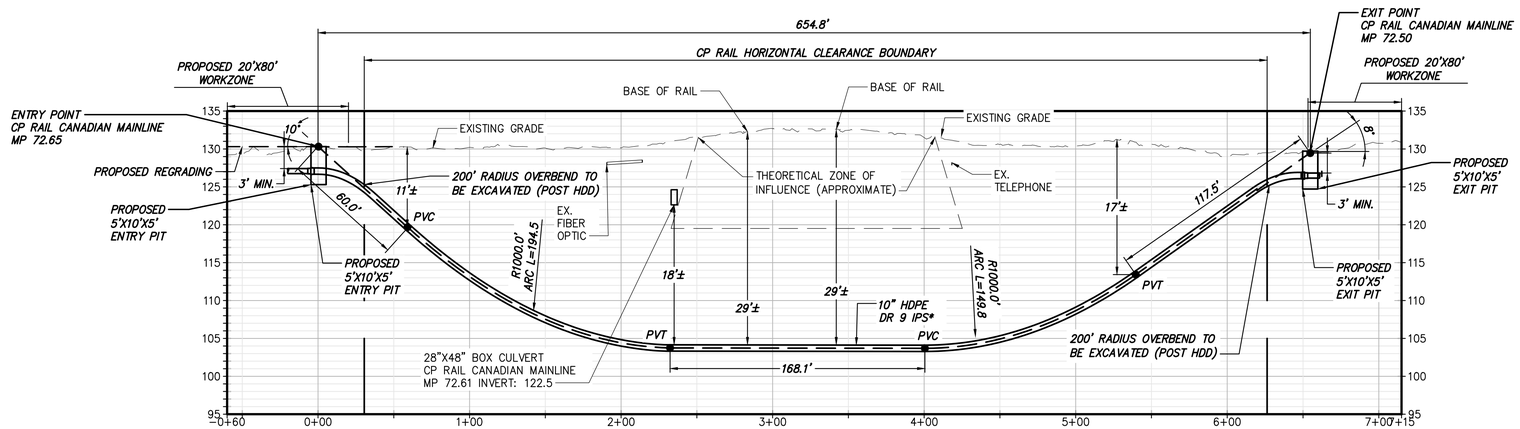

PROPOSED HDD 8 PROFILE

CONDUIT 2

Scale in feet: 0 50 100

*HDD 8 CONSIST OF (2) HVDC ELECTRICAL TRANSMISSION CABLES HOUSED IN INDIVIDUAL 10" DIAMETER CASINGS.

A THIRD 2" CASING WILL BE BUNDLED WITH ONE OF THE 10" CASINGS FOR A TELECOMMUNICATIONS LINE.

BORING LOG STRIP LEGEND

B101

10-10-10

Recovery %/RQD % =95%/90%

11000 =UCS

Legend

	ASPHALT	Asphalt
	CH	Fat CLAY
	CL	Lean CLAY
	CL-ML	SILTY CLAY
	CONCRETE	Concrete
	Fill	Fill
	GC	CLAYEY GRAVEL
	GM	SILTY GRAVEL
	Gneiss	Undefined
	GP	Poorly Graded GRAVEL
	GW	Well Graded GRAVEL
	ML	SILT
	OL	ORGANIC Lean CLAY
	OL/OH	ORGANIC SOIL
	Rock	Undefined
	Sandstone	Sandstone
	SC	CLAYEY SAND
	SC-SM	SILT, CLAYEY SAND
	SHALE	Shale
	SM	SILTY SAND
	SP	Poorly Graded SAND
	SP-SM	Poorly Graded SAND with SILT
	SW	Well graded SAND
	Topsoil	Topsoil
	USGS 708	Gneiss
	USGS 718	Granite 1
	USGS 732	Quartz

CHPE Champlain Hudson Power Express

Kiewit

CHA
III Winners Circle, PO Box 5269
Albany, NY 12205-0269
518.453.4500 . www.chacompanies.com

IT IS A VIOLATION OF LAW FOR ANY PERSON, UNLESS THEY ARE ACTING UNDER THE DIRECTION OF A LICENSED PROFESSIONAL ENGINEER, ARCHITECT, LANDSCAPE ARCHITECT OR LAND SURVEYOR TO ALTER AN ITEM IN ANY WAY. IF AN ITEM BEARING THE STAMP OF A LICENSED PROFESSIONAL IS ALTERED, THE ALTERING ENGINEER, ARCHITECT, LANDSCAPE ARCHITECT OR LAND SURVEYOR SHALL STAMP THE DOCUMENT AND INCLUDE THE NOTATION "ALTERED BY" FOLLOWED BY THEIR SIGNATURE, THE DATE OF SUCH ALTERATION, AND A SPECIFIC DESCRIPTION OF THE ALTERATION.

No.	DATE	SUBMITTAL / REVISION DESCRIPTION	DB	APP
A	07/08/2021	EM&CP REGULATORY SUBMISSION	JM	JR

CHAMPLAIN HUDSON POWER EXPRESS

SEGMENT 3 (PACKAGE 1C) WHITEHALL TO FORT ANN

PROPOSED PLAN AND PROFILE - HDD 8
CP RAILROAD CROSSING - CONDUIT 2
WHITEHALL, WASHINGTON COUNTY, NY

KIEWIT PROJECT NO. 21162
CHA PROJECT NO. 066076
DRAWING NO. **C-307A**

DRAWN BY: CKZ | DESIGNED BY: CKZ | APPROVED BY: JEO | SCALE AS NOTED | DATE 07/08/2022 | REV. NO. X | SH.NO. XXX OF XXX

File: V:\PROJECTS\ANY\K6\066076.000\09_DESIGN\DRAWINGS\01_SHEETS\DESIGN PACKAGE 1\DESIGN PACKAGE 1C\066076_1C_C_307A.DWG Saved: 7/8/2022 9:50:12 AM Plotted: 7/8/2022 9:55:29 AM Current User: Snyder, Morgan LastSavedBy: 7787

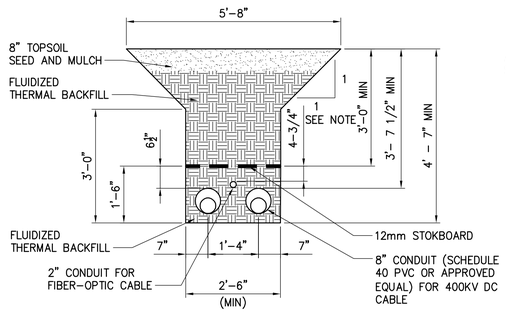

OPEN TRENCH

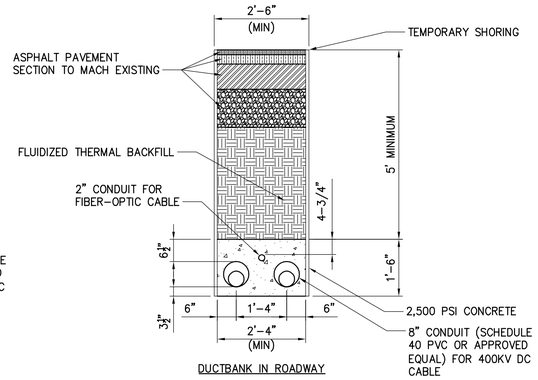

DUCTBANK IN ROADWAY

NOTE:
1. SLOPE SHALL BE BASED ON OSHA SHEETING AND SHORING REQUIREMENTS TO BE DETERMINED BY THE COMPETENT PERSON IN THE FIELD.

1 **30" WIDTH, 16" CENTER TO CENTER SPACING**
NOT TO SCALE

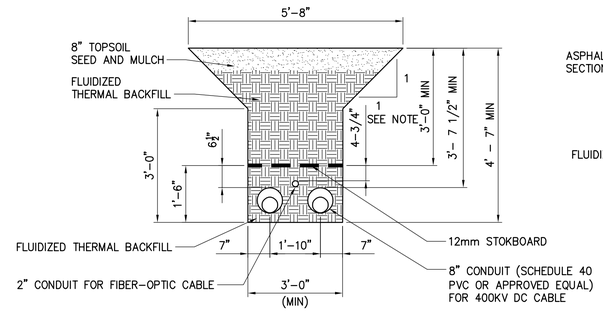

OPEN TRENCH

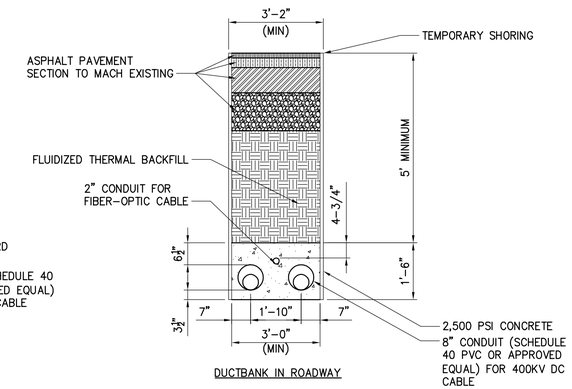

DUCTBANK IN ROADWAY

NOTE:
1. SLOPE SHALL BE BASED ON OSHA SHEETING AND SHORING REQUIREMENTS TO BE DETERMINED BY THE COMPETENT PERSON IN THE FIELD.

2 **36" WIDTH, 22" CENTER TO CENTER SPACING**
NOT TO SCALE

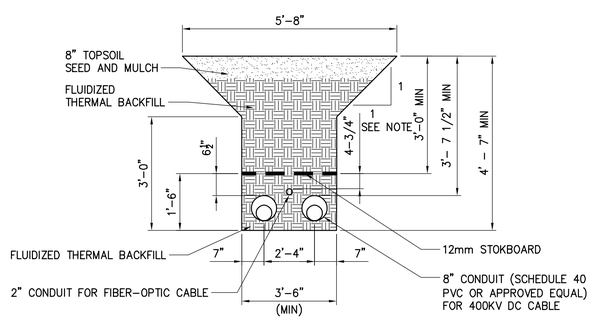

OPEN TRENCH

NOTE:
1. SLOPE SHALL BE BASED ON OSHA SHEETING AND SHORING REQUIREMENTS TO BE DETERMINED BY THE COMPETENT PERSON IN THE FIELD.

3 **42" WIDTH, 28" CENTER TO CENTER SPACING**
NOT TO SCALE

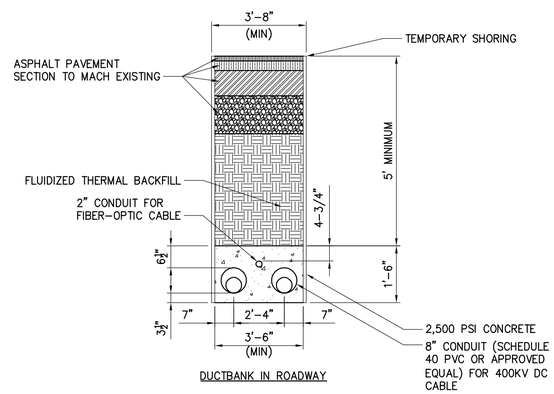

DUCTBANK IN ROADWAY

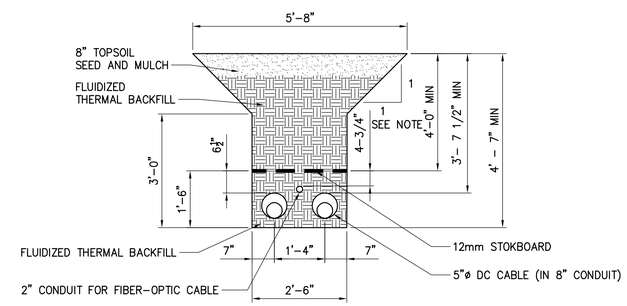

NOTE:
1. SLOPE SHALL BE BASED ON OSHA SHEETING AND SHORING REQUIREMENTS TO BE DETERMINED BY THE COMPETENT PERSON IN THE FIELD.

4 **OPEN TRENCH WITHIN AG LANDS (30" WIDTH, 16" CENTER TO CENTER SPACING)**
NOT TO SCALE

CHPE Champlain Hudson Power Express

Kiewit

CHA
III Winners Circle, PO Box 5269
Albany, NY 12205-0269
518.453.4500 . www.chacompanies.com

IT IS A VIOLATION OF LAW FOR ANY PERSON, UNLESS THEY ARE ACTING UNDER THE DIRECTION OF A LICENSED PROFESSIONAL ENGINEER, ARCHITECT, LANDSCAPE ARCHITECT OR LAND SURVEYOR TO ALTER AN ITEM IN ANY WAY. IF AN ITEM BEARING THE STAMP OF A LICENSED PROFESSIONAL IS ALTERED, THE ALTERING ENGINEER, ARCHITECT, LANDSCAPE ARCHITECT OR LAND SURVEYOR SHALL STAMP THE DOCUMENT AND INCLUDE THE NOTATION "ALTERED BY" FOLLOWED BY THEIR SIGNATURE, THE DATE OF SUCH ALTERATION, AND A SPECIFIC DESCRIPTION OF THE ALTERATION.

No.	DATE	SUBMITTAL / REVISION DESCRIPTION	DB	APP
A	07/08/2021	EM&CP REGULATORY SUBMISSION	JM	JR

CHAMPLAIN HUDSON POWER EXPRESS
SEGMENT 3 (PACKAGE 1C) WHITEHALL TO FORT ANN
TRENCHING DETAILS

KIEWIT PROJECT NO.	21162
CHA PROJECT NO.	066076
DRAWING NO.	C-621

DRAWN BY: XXX | DESIGNED BY: XXX | APPROVED BY: XXX | SCALE AS NOTED | REV. NO. X | DATE 07/08/2022 | SH.NO. XXX OF XXX

File: V:\PROJECTS\ANY\K6\066076.000\09_DESIGN\DRAWINGS\01_SHEETS\DESIGN PACKAGE 1\DESIGN PACKAGE 1C\066076_PH1C - C-621.DWG Saved: 7/6/2022 2:41:32 PM Plotted: 7/7/2022 3:27:05 PM Current User: Evans, Josh LastSavedBy: 4894

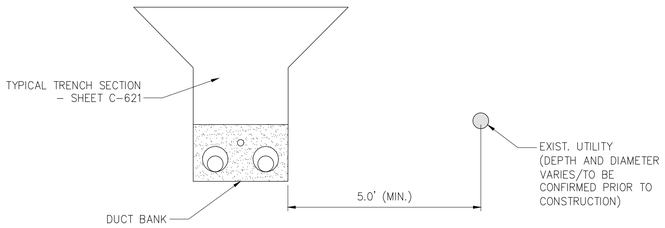

1 OPEN TRENCH – HORIZONTAL SEPARATION
NOT TO SCALE

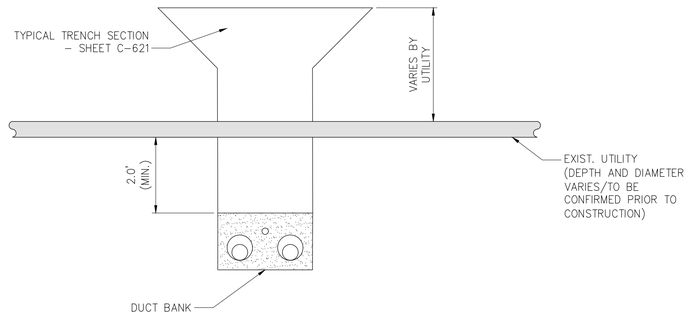

3 OPEN TRENCH – VERTICAL SEPARATION (UNDER)
NOT TO SCALE

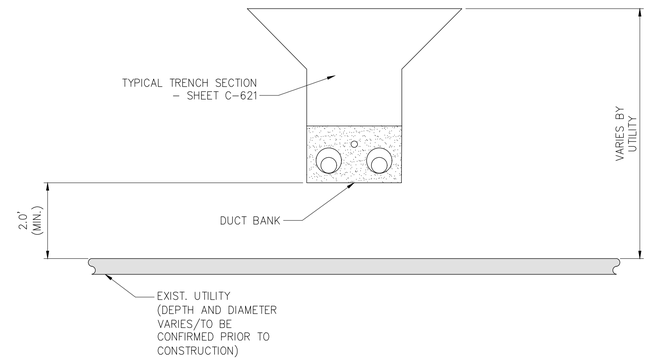

5 OPEN TRENCH – VERTICAL SEPARATION (OVER)
NOT TO SCALE

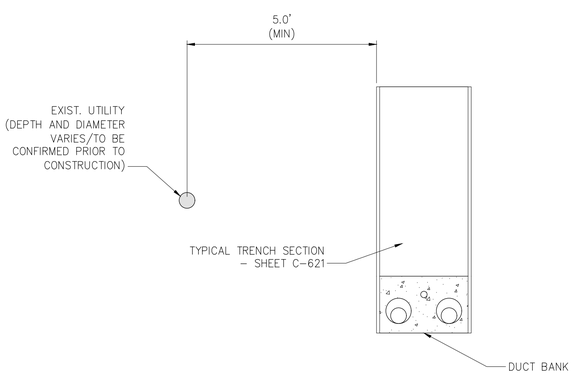

2 TYPICAL DUCTBANK IN ROADWAY – HORIZONTAL SEPARATION
NOT TO SCALE

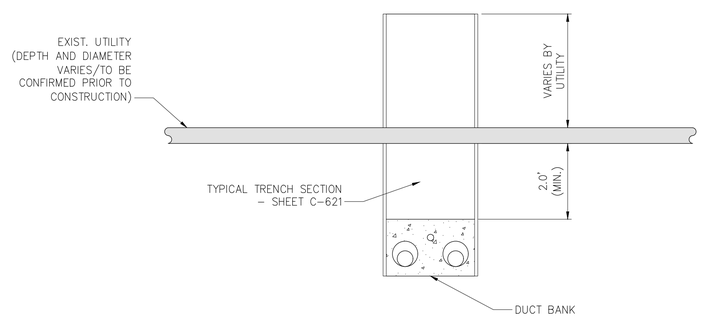

4 TYPICAL DUCTBANK IN ROADWAY – VERTICAL SEPARATION (UNDER)
NOT TO SCALE

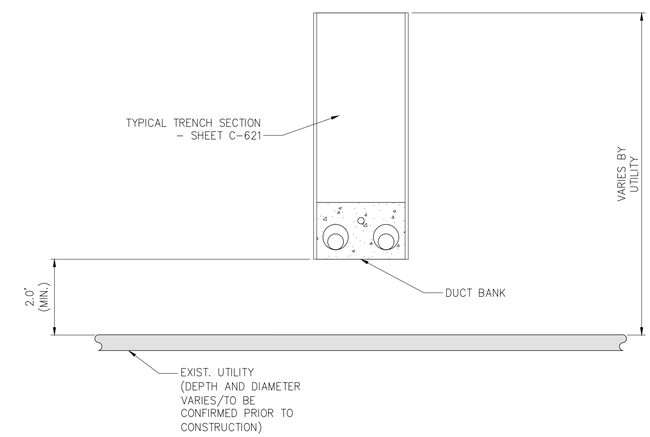

6 TYPICAL DUCTBANK IN ROADWAY – VERTICAL SEPARATION (OVER)
NOT TO SCALE

CHPE Champlain Hudson Power Express

Kiewit

CHA
III Winners Circle, PO Box 5269
Albany, NY 12205-0269
518.453.4500 . www.chacompanies.com

IT IS A VIOLATION OF LAW FOR ANY PERSON, UNLESS THEY ARE ACTING UNDER THE DIRECTION OF A LICENSED PROFESSIONAL ENGINEER, ARCHITECT, LANDSCAPE ARCHITECT OR LAND SURVEYOR TO ALTER AN ITEM IN ANY WAY. IF AN ITEM BEARING THE STAMP OF A LICENSED PROFESSIONAL IS ALTERED, THE ALTERING ENGINEER, ARCHITECT, LANDSCAPE ARCHITECT OR LAND SURVEYOR SHALL STAMP THE DOCUMENT AND INCLUDE THE NOTATION "ALTERED BY" FOLLOWED BY THEIR SIGNATURE, THE DATE OF SUCH ALTERATION, AND A SPECIFIC DESCRIPTION OF THE ALTERATION.

No.	DATE	SUBMITTAL / REVISION DESCRIPTION	DB	APP
A	07/08/2022	EM&CP REGULATORY SUBMISSION	JM	JR

CHAMPLAIN HUDSON POWER EXPRESS
SEGMENT 3 (PACKAGE 1C) WHITEHALL TO FORT ANN
UTILITY TYPICAL
SEPARATION DETAILS

KIEWIT PROJECT NO. 21162
CHA PROJECT NO. 066076
DRAWING NO. **C-901**

DRAWN BY: WSO DESIGNED BY: WSO APPROVED BY:
SCALE AS NOTED DATE 07/08/2022
REV. NO. A SH.NO. XXX OF XXX

File: P:\PROJECTS\KIE-CHPE\3-DES\95 WIP\S_OTERO\066076_PH1A - C-901.DWG Saved: 4/13/2022 10:30:08 AM Plotted: 6/20/2022 12:05:29 PM Current User: William.Otero LastSavedBy: William.Otero